DUCA **DOMESTIC PORTFOLIO**

DUCA®

DOMESTIC
PRODUCTS 2025

Great Place To Work. Certified JAN 2025-JAN 2026 TÜRKİYE

DUCA®

Reliable and Efficient Domestic Solutions

DUCA specializes in providing high-performance, durable, and energy-efficient pump solutions for heating and water circulation systems.

Our domestic pump range is designed to ensure optimal efficiency and reliability in residential and small-scale applications. With a strong focus on quality and innovation, DUCA pumps offer long-lasting performance while adapting seamlessly to various system requirements.

This catalog presents our comprehensive range of domestic pumps, along with their technical specifications and key features.

MADE IN TURKİYE

DUCA®

AUTO
DUCA
MASTER 25-40
230~
240V
TF110
IP42
Class F
50/60Hz
0.3Mpa

*Master

TECHNICAL DATA SHEET

MASTER

4-6M EEI ≤ 0.20, 8M EEI ≤ 0.21

iPWM ErP READY

Application

For domestic hot water system such as mix water underfloor heating system, air energy hot water circulation system, solar hot water circulation system and family hot, cold water pressurization circulation, etc.

Main features

- 4-6M EEI ≤ 0.20, 8M EEI ≤ 0.21
- Intelligent frequency control
- Compact size, easy for installation
- Proportional pressure mode
- Constant pressure mode
- Constant speed mode
- AUTO adapt mode
- PWM external control optional
- Visualized operation
- Low noise, low temperature

Working condition

- Liquid temperature：2℃～110℃
- Ambient temperature：0～+40℃
- Max system pressure：10bar
- Protection level：IP42
- Rated voltage/frequency：220V～240V/50Hz
- Insulation class：E
- Pumped liquid characteristics: clean liquid, free from solids and mineral oils, non-toxic, chemically neutral, close to the characteristics of water
- Installation: the motor shaft must be kept in horizontal direction

Functions for different model

Model	Internal control			External control
	PP	CP	CS	PWM
MASTER XX - X - XXX	I	I	I	PWM1
	II	II	II	
	III	III	III	
	AUTO	/	/	
MASTER XX - X - XXX PWM1	/	/	III	PWM1
MASTER XX - X - XXX PWM2	/	/	III	PWM2

MASTER

XX - 4

Max. Flow Rate 2.6 m³/h

Max. Head 4m

Nameplate

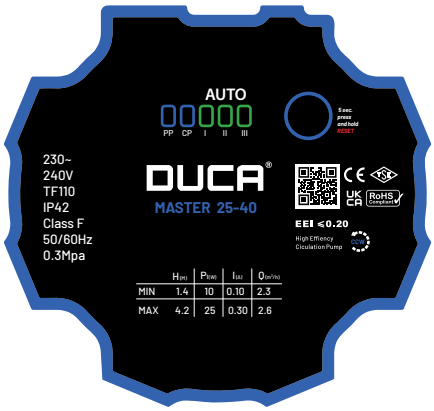

Performance Curve

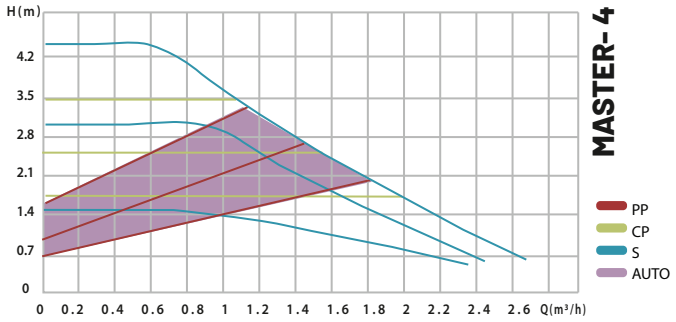

EEI ≤ 0.20

iPWM ErP READY CE RoHS Compliant

Dimensions

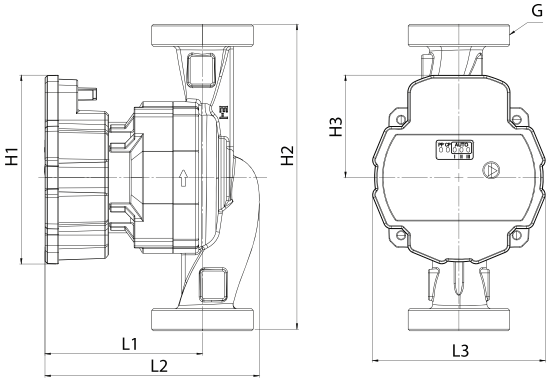

L1 93 mm

L2 126 mm

L3 99 mm

H1 110 mm

H2 130/180 mm

H3 60 mm

Different models

Model	Min/Max Temp (°C)	L (mm)	DN	P1 Max	Voltage (V)	Rated Current (A)	Union
15-4-130	-10 to +110	130	15mm G1	25	1x230	0,3	G1 to G3/4
25-4-130	-10 to +110	130	25mm G1½	25	1x230	0,3	G1½ to G1
25-4-180	-10 to +110	180	25mm G1½	25	1x230	0,3	G1½ to G1

MASTER

XX - 6

Max. Flow Rate
3,2 m³/h

Max. Head
6m

Nameplate

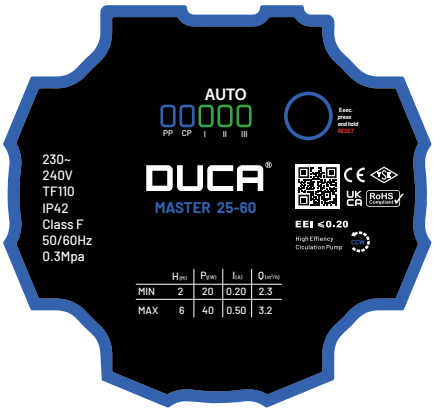

Performance Curve

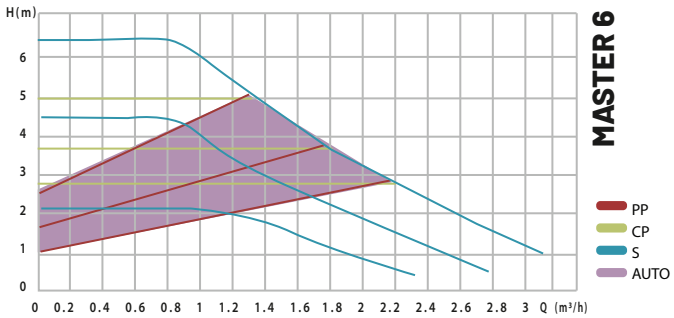

EEI ≤ 0.20

iPWM ErP READY CE RoHS Compliant

Dimensions

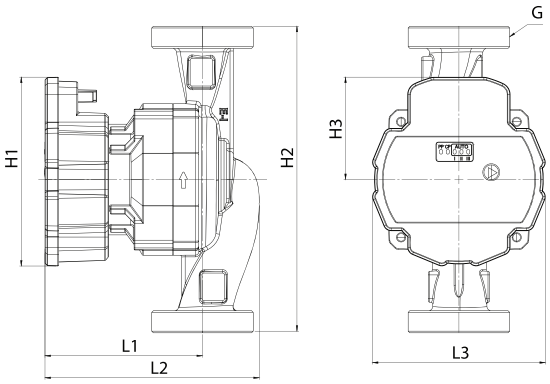

L1 93 mm
L2 126 mm
L3 99 mm

H1 110 mm
H2 130/180 mm
H3 60 mm

Different models

Model	Min/Max Temp (°C)	L (mm) H2	DN G	P1 Max	Voltage (V)	Rated Current (A)	Union
15-6-130	-10 to +110	130	15mm G1	40	1x230	0,5	G1 to G3/4
25-6-130	-10 to +110	130	25mm G1½	40	1x230	0,5	G1½ to G1
25-6-180	-10 to +110	180	25mm G1½	40	1x230	0,5	G1½ to G1
32-6-180	-10 to +110	180	32mm G2	40	1x230	0,5	G2 to G1¼

MASTER

XX - 8

Max. Flow Rate
3,5 m³/h

Max. Head
8m

Nameplate

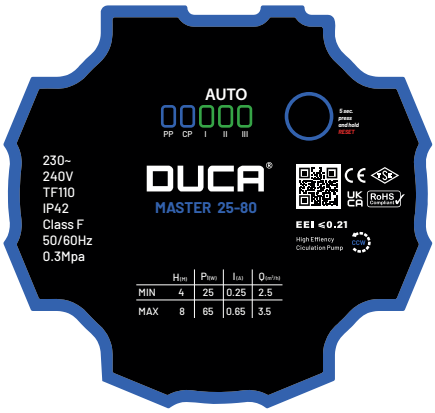

Performance Curve

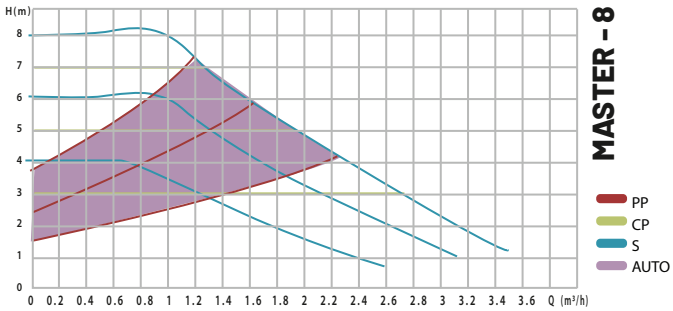

EEI ≤ 0.21

iPWM ErP READY CE RoHS Compliant

Dimensions

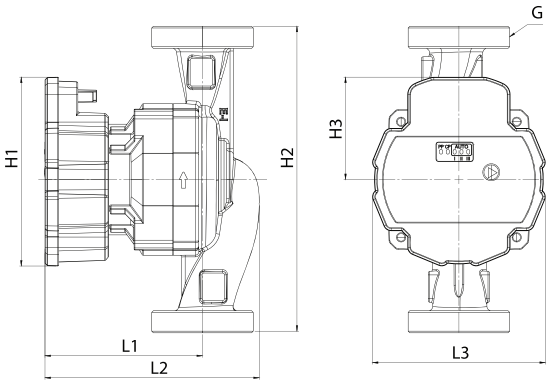

L1 93 mm
L2 126 mm
L3 99 mm

H1 110 mm
H2 130/180 mm
H3 60 mm

Different models

Model	Min/Max Temp (°C)	L (mm) H2	DN	G	P1 Max	Voltage (V)	Rated Current (A)	Union
15-8-130	-10 to +110	130	15mm	G1	65	1x230	0,65	G1 to G3/4
25-8-130	-10 to +110	130	25mm	G1½	65	1x230	0,65	G1½ to G1
25-8-180	-10 to +110	180	25mm	G1½	65	1x230	0,65	G1½ to G1
32-8-180	-10 to +110	180	32 mm	G2	65	1x230	0,65	G2 to G1¼

*For Solar Application.

Max. Flow Rate 3,5 m³/h

Max. Head 8m

MASTER-S

XX - 8

Nameplate

Performance Curve

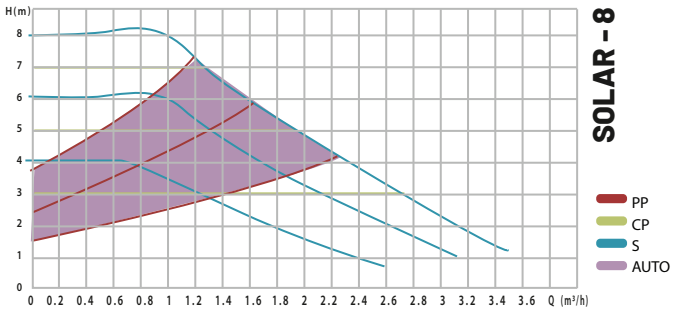

EEI ≤ 0.23

iPWM ErP READY CE RoHS Compliant

Dimensions

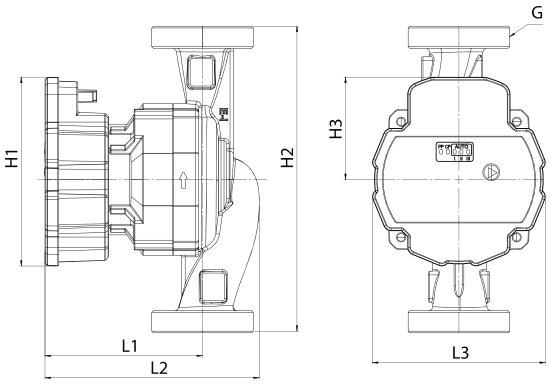

L1 93 mm

L2 126 mm

L3 99 mm

H1 110 mm

H2 130/180 mm

H3 60 mm

Different models

Model	Min/Max Temp (°C)	L (mm) H2	DN	G	P1 Max	Voltage (V)	Rated Current (A)	Union
15-8-130	-10 to +110	130	15mm	G1	65	1x230	0,65	G1 to G3/4
25-8-130	-10 to +110	130	25mm	G1½	65	1x230	0,65	G1½ to G1
25-8-180	-10 to +110	180	25mm	G1½	65	1x230	0,65	G1½ to G1
32-8-180	-10 to +110	180	32 mm	G2	65	1x230	0,65	G2 to G1¼

DUCA®

*Tre3m

TECHNICAL DATA SHEET

TRE3 Series

Application

For domestic hot water system such as mix water underfloor heating system, air energy hot water circulation system, solar hot water circulation system and family hot, cold water pressurization circulation, etc.

Main Features

- **Maximum efficiency EEI≤0.20**
- Compact design, small size, and light weight
- Low noise, high sealing
- Proportional pressure mode
- Constant pressure mode
- Constant speed mode
- AUTO adapt mode

Working Conditions

- Liquid Temperature: 2°～95°
- Ambient Temperature：0～40°
- Maximum System Pressure : 10bar
- Protection Level：IP44
- Nominal Voltage/Frequency：220V～240V/50～60Hz
- Insulation Class : F
- Inrush Current: <2A
- Pumped Liquid Properties: clean liquid, free of solids and mineral oils, non-toxic, chemically neutral, similar to water properties

EEI ≤ 0.20
iPWM ErP READY CE RoHS Compliant MADE IN TURKİYE

TRE3S
XX-65

Max. Flow Rate
2.5 m³/h

Max. Head
6.5m

Nameplate

*Custom OEM Nameplate Design
Available Upon Request

Performance Curve

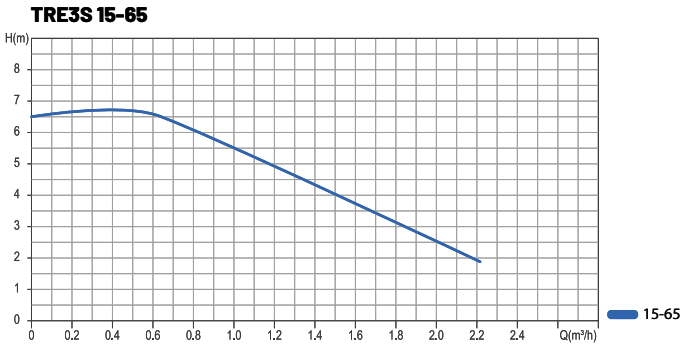

EEI ≤ 0.20

ErP READY

CE RoHS Compliant

Dimension

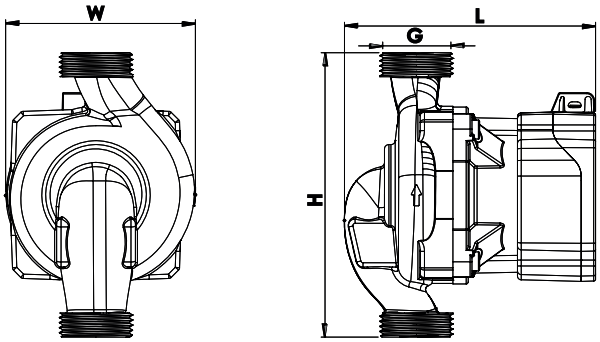

W 94 mm
L 132 mm
H 130/180 mm

G 1"

Model Information

Model	Min/Max Temp (°C)	L (mm) H2	DN G	P1 Max	Voltage (V)	Rated Current (A)	Union
15-65-130	+2 to +95	130	15mm G1	54W	1x230	0,45	G1 to G3/4
25-65-130	+2 to +95	130	25mm G1½				G1½ to G1
25-65-180	+2 to +95	180	25mm G1½				G1½ to G1
32-65-180	+2 to +95	180	32mm G2				G2 to G1¼

TRE3M
XX-40

Max. Flow Rate
2.5 m³/h

Max. Head
4m

Nameplate

*Custom OEM Nameplate Design
Available Upon Request

Performance Curve

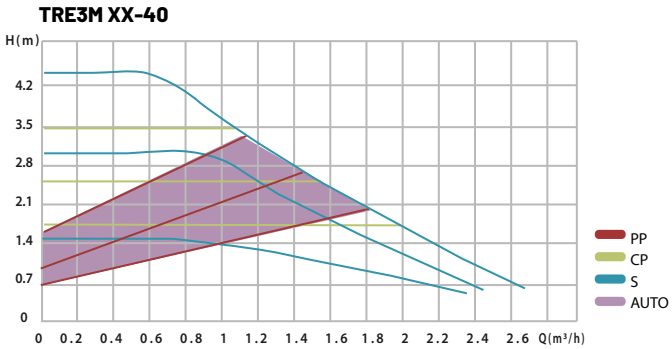

EEI ≤ 0.20

iPWM ErP READY CE RoHS Compliant

Dimension

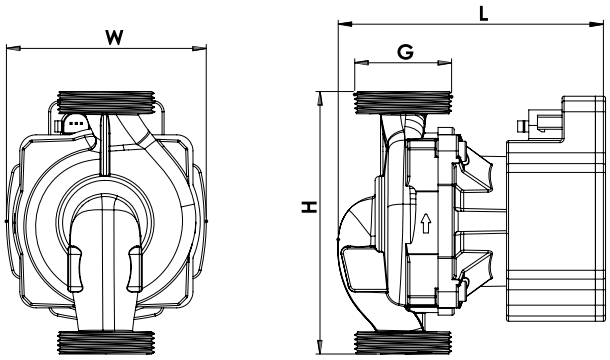

W 99 mm
L 130 mm
H 130mm

G 1½"

Model Information

Model	Min/Max Temp (°C)	L (mm) H2	DN	G	P1 Max	Voltage (V)	Rated Current (A)	Union
15-40-130	+2 to +95	130	15mm	G1	40W	1x230	0,37	G1 to G3/4
25-40-130	+2 to +95	130	25mm	G1½				G1½ to G1

TRE3M
XX-60

Max. Flow Rate
3.2 m³/h

Max. Head
6m

Nameplate

*Custom OEM Nameplate Design
Available Upon Request

Performance Curve

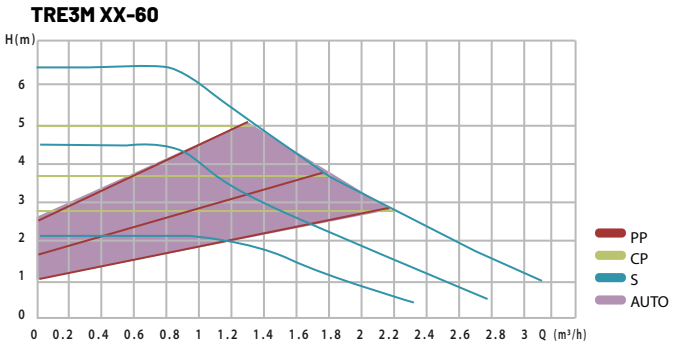

EEI ≤ 0.20

iPWM ErP READY CE RoHS Compliant

Dimension

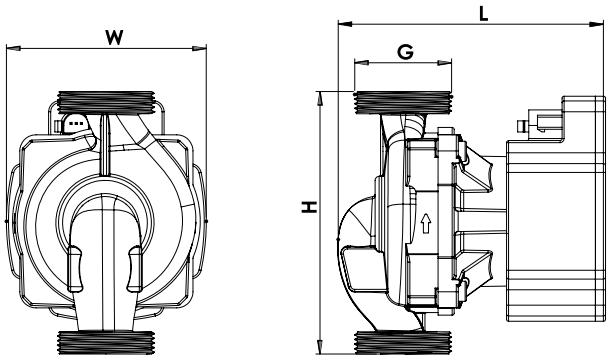

W 99 mm
L 130 mm
H 130/180mm

G 1½"

Model Information

Model	Min/Max Temp (°C)	L (mm) H2	DN G	P1 Max	Voltage (V)	Rated Current (A)	Union
15-60-130	+2 to +95	130	15mm G1	50W	1x230	0,45	G1 to G3/4
25-60-130	+2 to +95	130	25mm G1½				G1½ to G1
25-60-180	+2 to +95	180	25mm G1½				G1½ to G1
32-60-180	+2 to +95	180	32mm G2				G2 to G1¼

TRE3M
XX-80

Max. Flow Rate
3.5 m³/h

Max. Head
8m

Nameplate

*Custom OEM Nameplate Design
Available Upon Request

Performance Curve

TRE3M XX-80

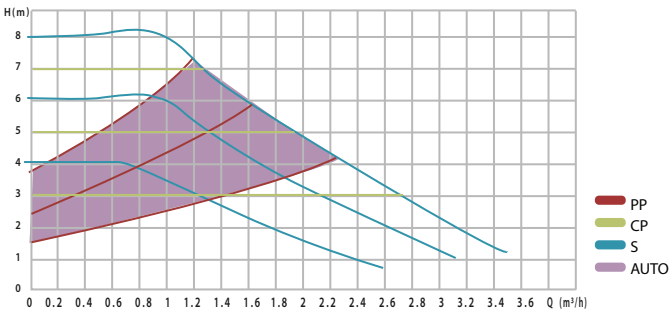

EEI ≤ 0.20

iPWM ErP READY CE RoHS Compliant

Dimension

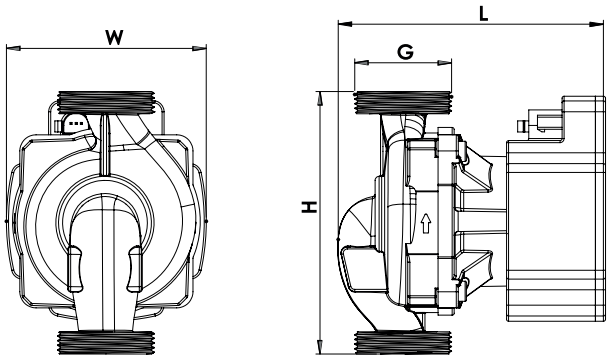

W 99 mm
L 130 mm
H 130/180mm

G 1½"

Model Information

Model	Min/Max Temp (°C)	L (mm) H2	DN G	P1 Max	Voltage (V)	Rated Current (A)	Union
15-80-130	+2 to +95	130	15mm G1	50W	1x230	0,45	G1 to G3/4
25-80-130	+2 to +95	130	25mm G1½				G1½ to G1
25-80-180	+2 to +95	180	25mm G1½				G1½ to G1
32-80-180	+2 to +95	180	32mm G2				G2 to G1¼

TRE3L
XX-95

Max. Flow Rate
4.5 m³/h

Max. Head
9m

Nameplate

*Custom OEM Nameplate Design
Available Upon Request

Performance Curve

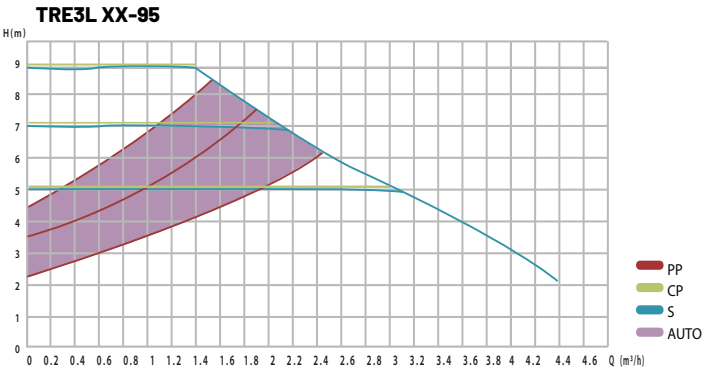

EEI ≤ 0.20

iPWM ErP READY CE RoHS Compliant

Dimension

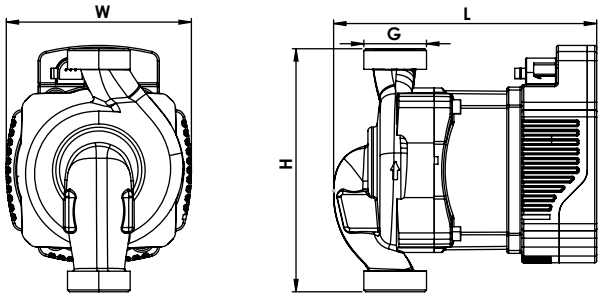

W 99 mm
L 173,2 mm
H 130/180 mm

G 1½"

Model Information

Model	Min/Max Temp (°C)	L (mm) H2	DN	G	P1 Max	Voltage (V)	Rated Current (A)	Union
15-95-130	+2 to +95	130	15mm	G1	100W	1x230	0,65	G1 to G3/4
25-95-180	+2 to +95	180	25mm	G1½				G1½ to G1
32-95-180	+2 to +95	180	25mm	G1½				G1½ to G1

Purposefully Engineered.
Reliably Delivered.

At DUCA, every pump begins with a purpose: to perform with precision, to endure over time, and to adapt to the real needs of daily life.

From design to delivery, our process is guided by expertise, quality, and a deep understanding of where and how our products operate. Each product is rigorously tested to ensure long-term reliability, energy efficiency, and consistent performance under varying conditions.

We don’t just manufacture components — we build trust, one pump at a time.

DUCA®

*Cosmo

COSMO

CAST IRON

BRASS

EEI ≤ 0.23

iPWM ErP READY

HIGH FLOW

Application

For domestic hot water system such as mix water underfloor heating system, air energy hot water circulation system, solar hot water circulation system and family hot, cold water pressurization circulation, etc.

Main features

- EEI≤0.23
- Permanent magnet plastic injection motor, intelligent frequency control
- Compact size, easy for installation
- Proportional pressure mode
- Constant pressure mode
- Constant speed mode
- AUTO adapt mode
- Night-setback mode
- Actual power display
- Low noise, low temperature

Working condition

- Liquid temperature：2℃～110℃
- Ambient temperature：0～+40℃
- Max system pressure：10bar
- Protection level：IP42
- Rated voltage/frequency：220V～240V 50/60Hz
- Insulation class：F
- Pumped liquid characteristics: clean liquid, free from solids and mineral oils, non-toxic, chemically neutral, close to the characteristics of water
- Installation: the motor shaft must be kept in horizontal direction

Functions for different model

Model	Internal control			External control
	PP	CP	CS	PWM
COSMO 32/25-8-180	I, II, III	I, II, III	I, II, III	AUTO
COSMO 32/25-10-180	I, II, III	I, II, III	I, II, III	
COSMO 32/25-12-180	I, II, III	I, II, III	I, II, III	

COSMO

XX - 8

Max. Flow Rate
8 m3/h

Max. Head
8 m

Nameplate

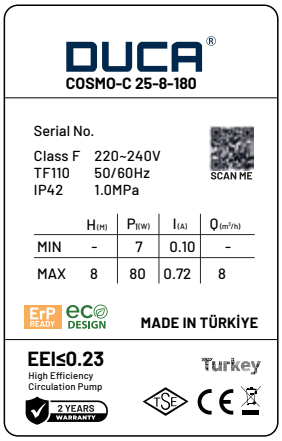

Performance Curve

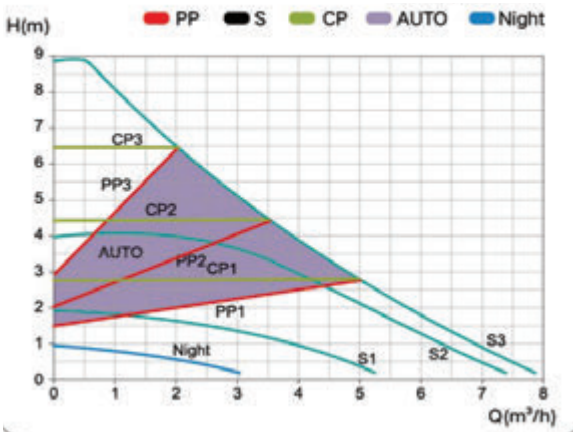

EEI ≤ 0.23
iPWM ErP READY CE RoHS Compliant UK CA TSE

Dimension

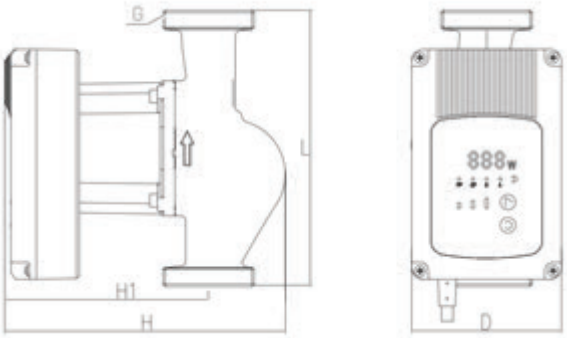

H 184 mm
H1 133 mm
L 180 mm
D 97 mm

Model Information

Model	Min/Max Temp (°C)	L (mm)	DN	P1 Max	Voltage (V)	Rated Current (A)	Union (G)
COSMO 25-8-180	2 to +110	130	DN25	80W	230	0.1-0.72	G1" 1/2
COSMO 32-8-180	2 to +110	180	DN32	80W	230	0.1-0.72	2"

COSMO

XX - 10

Max. Flow Rate 9 m3/h

Max. Head 10 m

Nameplate

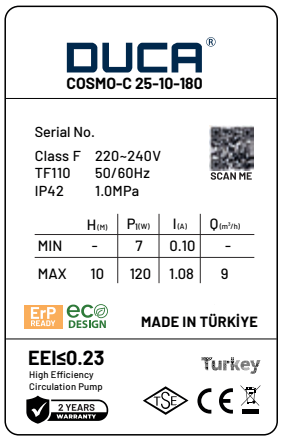

Performance Curve

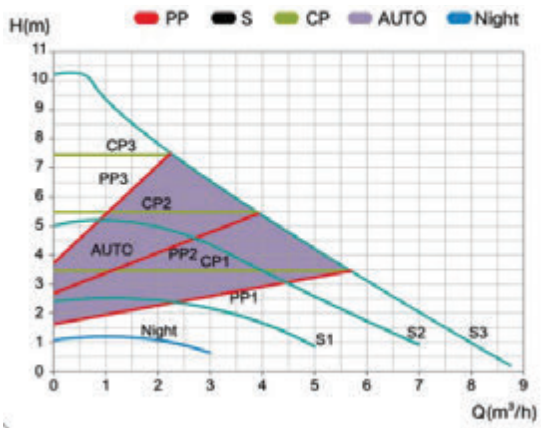

EEI ≤ 0.23

iPWM ErP READY CE RoHS Compliant UK CA TSE

Dimension

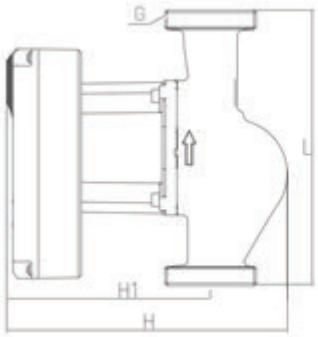

H 184 mm

H1 133 mm

L 180 mm

D 97 mm

Model Information

Model	Min/Max Temp (°C)	L (mm)	DN	P1 Max	Voltage (V)	Rated Current (A)	Union (G)
COSMO 25-10-180	2 to +110	180	DN25	120W	230	0.1-1.08	G1" 1/2
COSMO 32-10-180	2 to +110	180	DN32	120W	230	0.1-1.08	2"

COSMO

XX - 12

Max. Flow Rate

10 m3/h

Max. Head

12 m

Nameplate

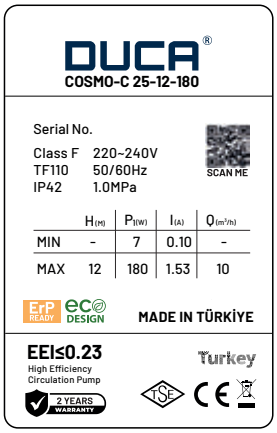

Performance Curve

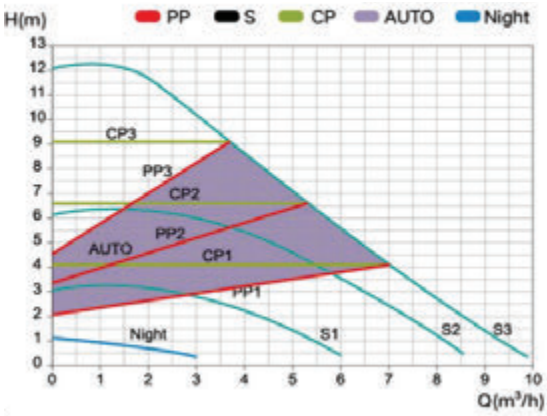

EEI ≤ 0.23

iPWM ErP READY CE RoHS Compliant UK CA TSE

Dimension

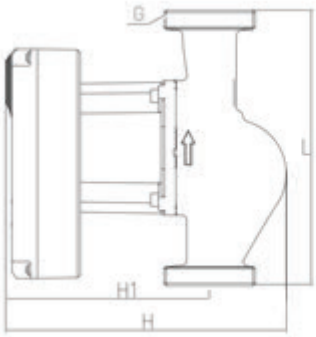

H 184 mm

H1 133 mm

L 180 mm

D 97 mm

Model Information

Model	Min/Max Temp (°C)	L (mm)	DN	P1 Max	Voltage (V)	Rated Current (A)	Union (G)
COSMO 25-12-180	2 to +110	180	DN25	180W	230	0.1-1.53	G1" 1/2
COSMO 32-12-180	2 to +110	180	DN32	180W	230	0.1-1.53	2"

DUCA®

Excellence Through Certified Production Processes

At Duca Pump, we are committed to delivering products of the highest quality and reliability, as evidenced by our **UKCA, TSE, CE** and **ROHS COMPLIANT** certifications, alongside production processes that adhere to **ISO** standards.

Our product portfolio includes the **Cosmo** and **Master** series circulator pumps, engineered to provide optimal solutions for various heating systems in domestic categories.

DUCA®

*Cosmo XL

COSMO XL

Application

For domestic hot water system such as mix water underfloor heating system, air energy hot water circulation system, solar hot water circulation system and family hot, cold water pressurization circulation, etc.

EEI ≤ 0.23

CE RoHS Compliant UKCA **HIGHER FLOW**

Main features

- 'A' Nominal energy efficiency lowest power consumption
- Permanent magnet aluminium die-cast housing motor, intelligent frequency control
- Compact design with control box integrated in the pump head
- Proportional pressure, constant pressure, constant speed mode
- Low noise operation

Working condition

- Maximum Ambient Temperature: +40 °C
- Protection Level: IP44
- Mains Connection: 220V～240V /50hz
- Insulation Class: F
- Pumped Liquid Properties:
- Clean, Solids and Mineral Oil Free,
- Non-toxic, Chemically Neutral,
- Close to Water Features

Functions for different model

Model	Internal control			External control
	PP	CP	CS	PWM
COSMO-XL 32/25-8-180	I, II, III	I, II, III	I, II, III	AUTO

COSMO XL

XX - 15

Max. Flow Rate
9,5 **m3/h**

Max. Pump Head
15 **m**

Nameplate

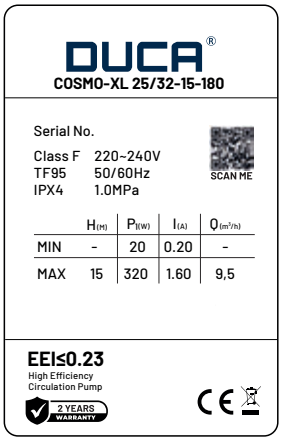

Performance Curve

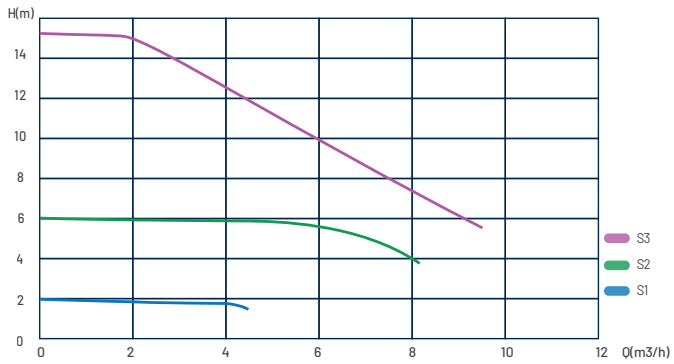

EEI ≤ 0.23

Dimension

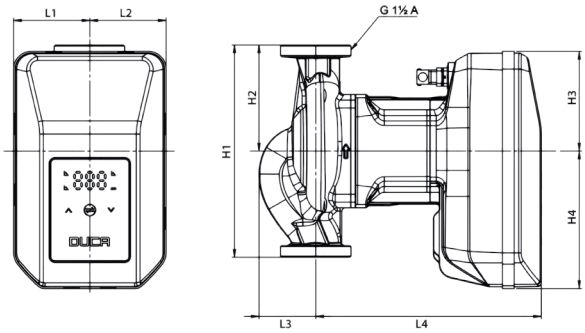

H1 180 mm
H2 90 mm
H3 85 mm
H4 117 mm

L1 65 mm
L2 65 mm
L3 48 mm
L4 191 mm

Model Information

Model	Min/Max Temp (°C)	L (mm)	DN	P1 Max	Voltage (V)	Rated Current (A)	Union (G)
25-15-180	-2 to +110	180	DN25	320W	230	0.2-1.6	G1½ to G1
32-15-180	-2 to +110	180	DN32	320W	230	0.2-1.6	G2 to G1 ½

DUCA®

DUCA®

*Cosmo+

TECHNICAL DATA SHEET

COSMO+

Application

For domestic hot water system such as mix water underfloor heating system, air energy hot water circulation system, solar hot water circulation system and family hot, cold water pressurization circulation, etc.

Main features

- 'A' Nominal energy efficiency lowest power consumption
- Permanent magnet aluminium die-cast housing motor, intelligent frequency control
- Compact design with control box integrated in the pump head
- Proportional pressure, constant pressure, constant speed mode
- Low noise operation

Working condition

- Maximum Ambient Temperature: +40 °C
- Protection Level: IP44
- Mains Connection: 220V～240V /50hz
- Insulation Class: H
- Pumped Liquid Properties:
- Clean, Solids and Mineral Oil Free,
- Non-toxic, Chemically Neutral,
- Close to Water Features

EEI ≤ 0.21
iPWM ErP READY CE RoHS Compliant TSE

COSMO+

XX - 8

Nameplate

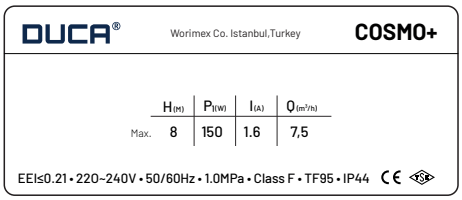

Max. Flow Rate	Max. Head
7,5 m³/h	8 m

Performance Curve

XX-8

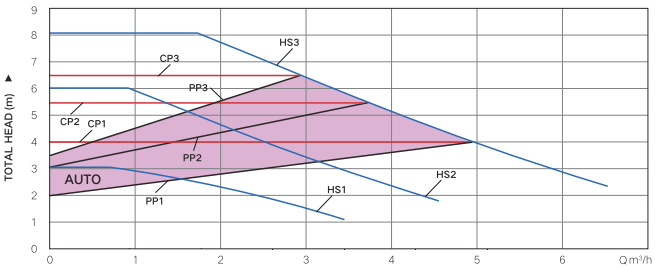

EEI ≤ 0.21

iPWM ErP READY CE RoHS Compliant TSE

Dimensions

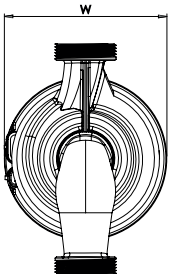

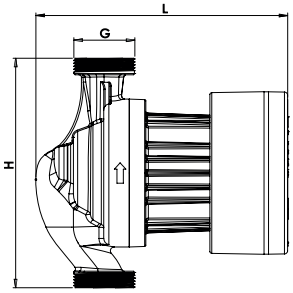

W 127 mm

H 180 mm

L 197,5 mm

Model Information

Model	Min/Max Temp (°C)	L (mm)	DN	P1 Max	Voltage (V)	Rated Current (A)	Union (G)
25-8-180	-2 to +110	180	DN25	120W	230	1.04	G1½ to G1
32-8-180	-2 to +110	180	DN32	120W	230	1.04	G2 to G1 ½

COSMO+

XX - 10

Max. Flow Rate
8 m³/h

Max. Head
10 m

Nameplate

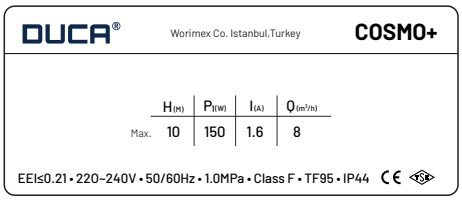

Performance Curve

XX-10

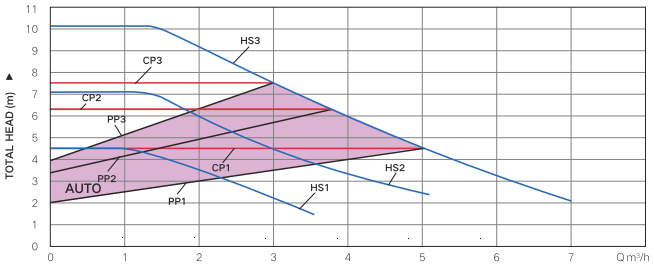

EEI ≤ 0.21

iPWM ErP READY CE RoHS Compliant TSE

Dimensions

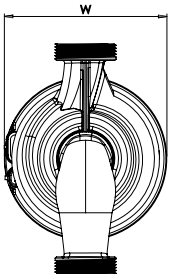

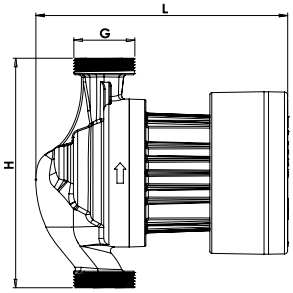

W 127 mm
H 180 mm

L 197,5 mm

Model Information

Model	Min/Max Temp (°C)	L (mm)	DN	P1 Max	Voltage (V)	Rated Current (A)	Union (G)
25-10-180	-2 to +110	180	DN25	150W	230	1.25	G1½ to G1
32-10-180	-2 to +110	180	DN32	150W	230	1.25	G2 to G1 ½

COSMO+

XX - 12

Nameplate

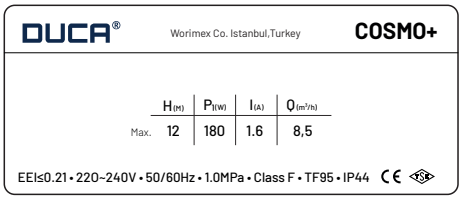

Max. Flow Rate
8,5 m³/h

Max. Head
12 m

Performance Curve

XX-12

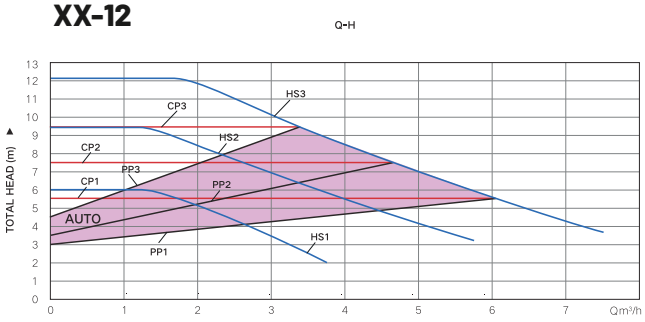

EEI ≤ 0.21

iPWM ErP READY CE RoHS Compliant TSE

Dimensions

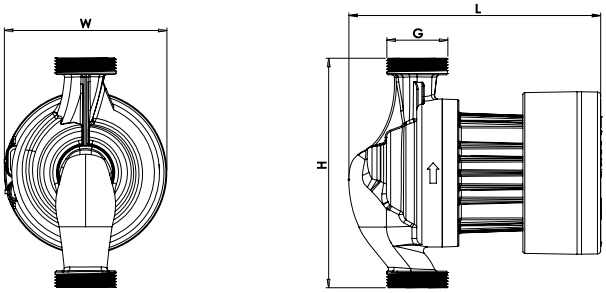

W 127 mm
H 180 mm

L 197,5 mm

Model Information

Model	Min/Max Temp (°C)	L (mm)	DN	P1 Max	Voltage (V)	Rated Current (A)	Union (G)
25-12-180	-2 to +110	180	DN25	180W	230	1.40	G1½ to G1
32-12-180	-2 to +110	180	DN32	180W	230	1.40	G2 to G1 ½

COSMO+

XX - 18

Max. Flow Rate
11 m³/h

Max. Head
18 m

Nameplate

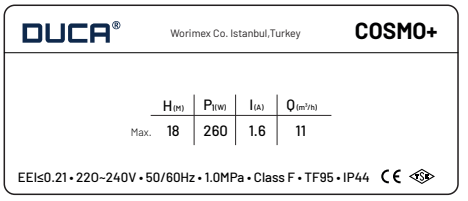

Performance Curve

XX-18

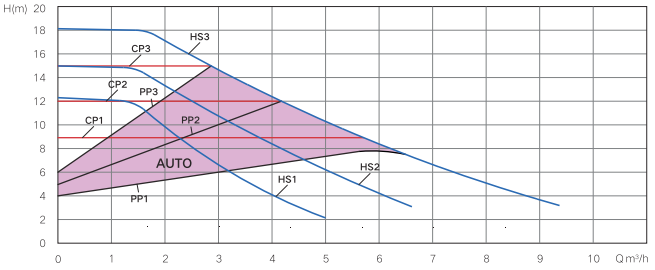

EEI ≤ 0.21

iPWM ErP READY CE RoHS Compliant TSE

Dimensions

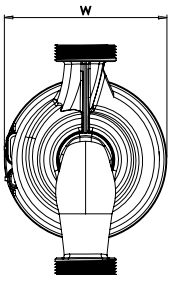

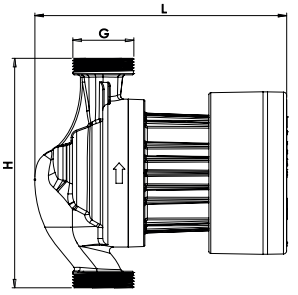

W 127 mm
H 180 mm

L 197,5 mm

Model Information

Model	Min/Max Temp (°C)	L (mm)	DN	P1 Max	Voltage (V)	Rated Current (A)	Union (G)
25-18-180	-2 to +110	180	DN25	260W	230	1.90	G1½ to G1
32-18-180	-2 to +110	180	DN32	260W	230	1.90	G2 to G1 ½

COSMO+

XX - 20

Nameplate

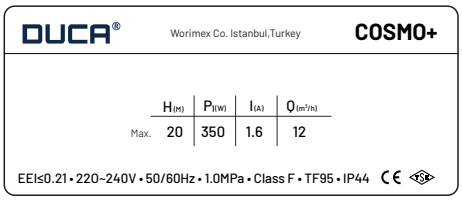

Max. Flow Rate
12 m³/h

Max. Head
20 m

Performance Curve

XX-20

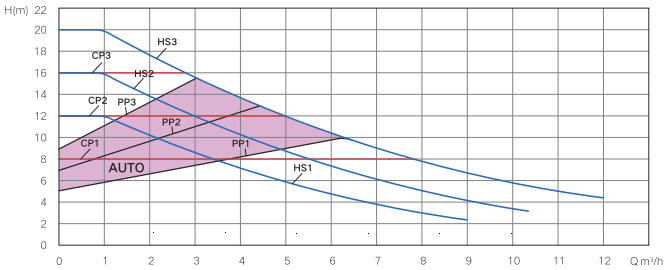

EEI ≤ 0.21

iPWM ErP READY CE RoHS Compliant TSE

Dimensions

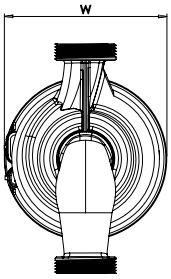

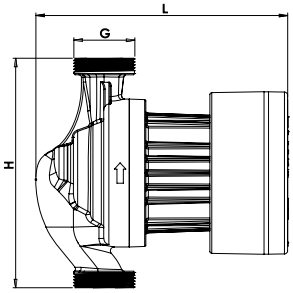

W 127 mm

H 180 mm

L 197,5 mm

Model Information

Model	Min/Max Temp (°C)	L (mm)	DN	P1 Max	Voltage (V)	Rated Current (A)	Union (G)
25-20-180	-2 to +110	180	DN25	350W	230	2.10	G1½ to G1
32-20-180	-2 to +110	180	DN32	350W	230	2.10	G2 to G1 ½

Precision in Every Detail

Where Engineering Meets Purpose

At DUCA, engineering is more than a process — it's a principle.
Each product is born from rigorous analysis, technical expertise, and a commitment to lasting performance.

From prototype to production, our engineers combine innovation with functionality to create pump technologies that work efficiently, reliably, and responsibly — today and into the future.

DUCA®

*Cosmo XXL

TECHNICAL DATA SHEET

COSMO XXL

Application

Whether for hot or cold water applications up to 95°C, the COSMO XXL is ideally suited for variable flow heating systems, dual-supply underfloor heating loops, air conditioning circuits, industrial circulation networksor domestic hot water systems. Built for durability, stability, and seamless integration, COSMO XXL stands as the intelligent core of modern water circulation systems.

Main features

- 'A' Nominal energy efficiency lowest power consumption
- Permanent magnet aluminium die-cast housing motor, intelligent frequency control
- Compact design with control box integrated in the pump head
- Proportional pressure, constant pressure, constant speed mode
- Low-noise operation for quiet performance
- Wi-Fi connectivity for remote monitoring and control
- Mobile application compatibility for easy setup and operation
- Temperature control mode

Working condition

- Maximum Ambient Temperature: +40 °C
- Protection Level: IP44
- Mains Connection: 220V or 380V
- Insulation Class: H
- Pumped Liquid Properties:
- Clean, Solids and Mineral Oil Free,
- Non-toxic, Chemically Neutral,
- Close to Water Features

EEI ≤ 0.21
iPWM ErP READY CE RoHS Compliant TSE

User Interface

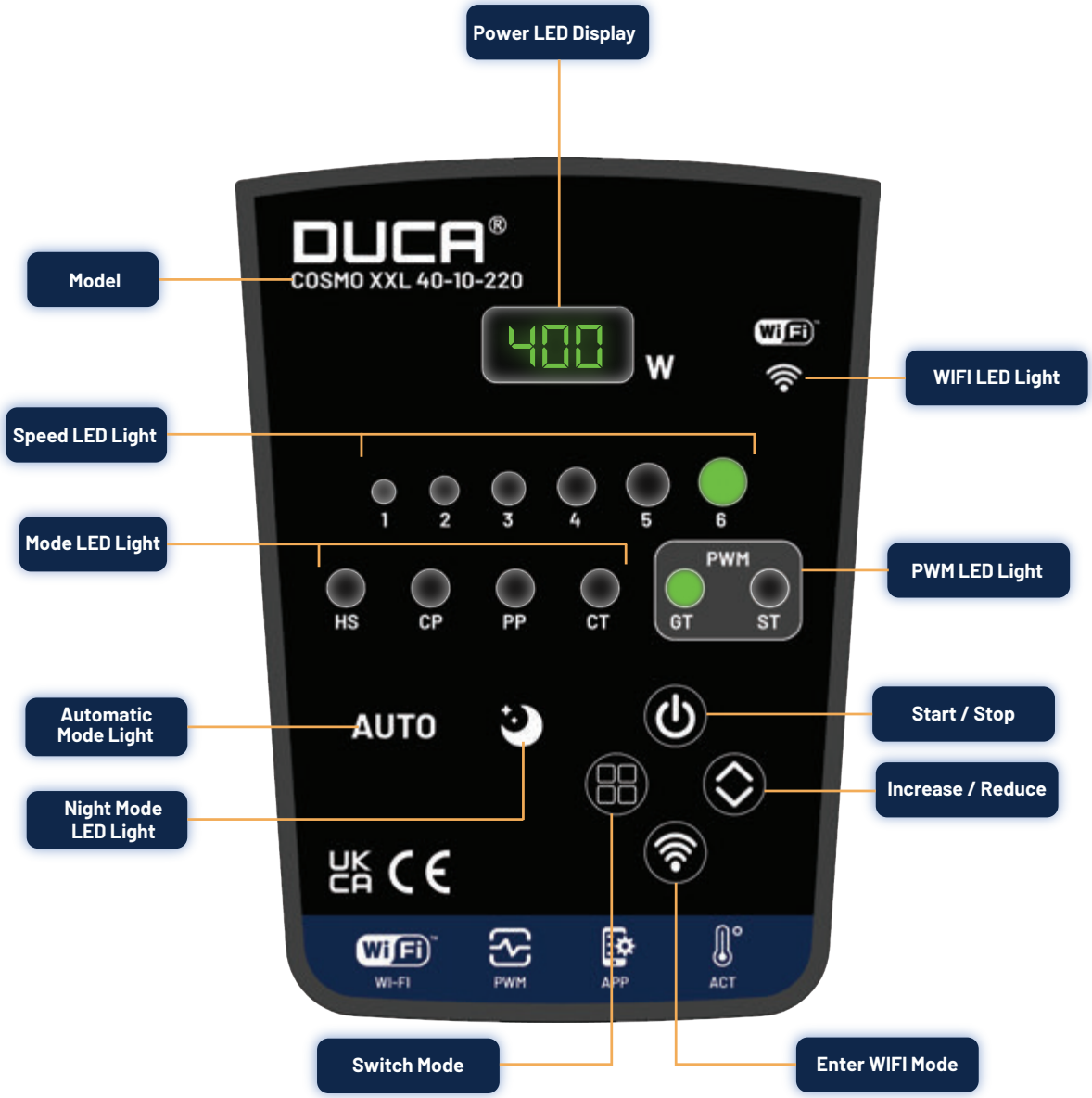

COSMO XXL

40-12-220

Max. Flow Rate	Max. Head
22 m³/h	12 m

Performance Curve

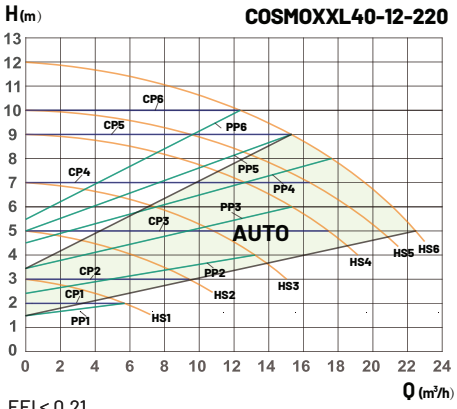

EEI ≤ 0.21

iPWM ErP READY CE RoHS Compliant

Dimensions

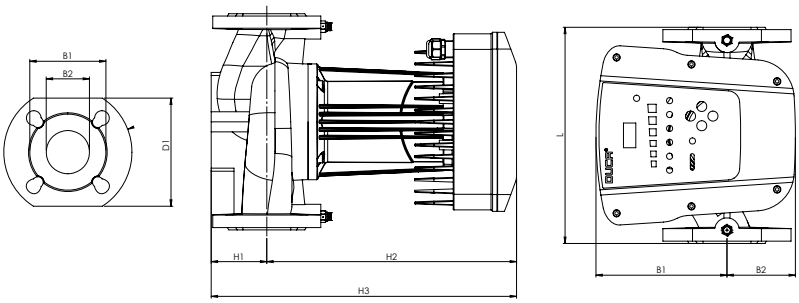

B1	83 mm	**H1**	65 mm	**L**	220 mm
B2	40 mm	**H2**	321,5 mm	**B1**	170 mm
D1	126 mm	**H3**	386,5 mm	**B2**	88,5 mm

Model Information

Model	Min/Max Temp (°C)	L (mm)	DN	P1 Max	Voltage (V)	Flange
40-12-220	-2 to +110	220	DN40	600W	220	DN 40 to G1½"

COSMO XXL

40-18-220

Max. Flow Rate	Max. Head
24 m³/h	18 m

Performance Curve

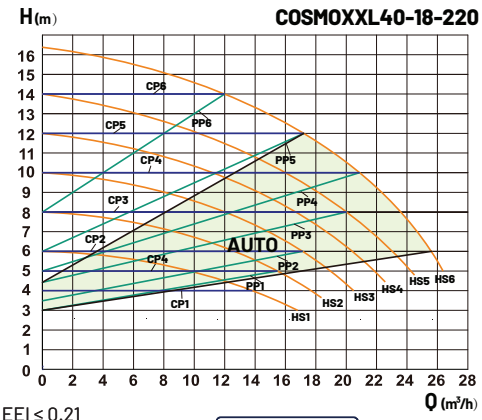

EEI ≤ 0.21

iPWM ErP READY CE RoHS Compliant

Dimensions

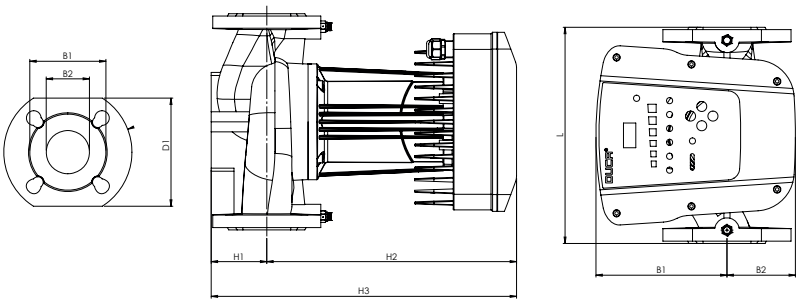

B1	83 mm	**H1**	65 mm	**L**	220 mm
B2	40 mm	**H2**	321,5 mm	**B1**	170 mm
D1	126 mm	**H3**	386,5 mm	**B2**	88,5 mm

Model Information

Model	Min/Max Temp (°C)	L (mm)	DN	P1 Max	Voltage (V)	Flange
40-18-220	-2 to +110	220	DN40	900W	220	DN 40 to G1½"

COSMO XXL

50-15-280

Max. Flow Rate	Max. Head
32 m³/h	15 m

Performance Curve

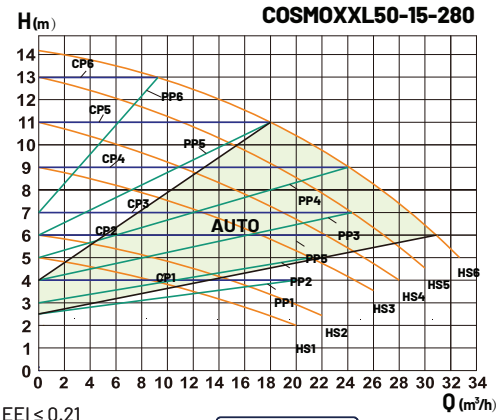

EEI ≤ 0.21

iPWM ErP READY CE RoHS Compliant

Dimensions

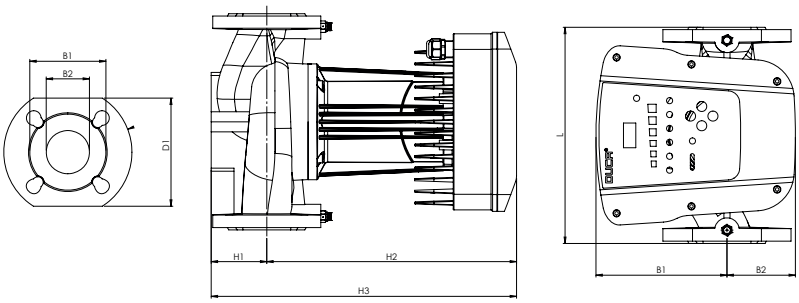

B1	95 mm	**H1**	72 mm	**L**	280 mm
B2	50 mm	**H2**	323,5 mm	**B1**	170 mm
D1	140 mm	**H3**	395,5 mm	**B2**	88,5 mm

Model Information

Model	Min/Max Temp (°C)	L (mm)	DN	P1 Max	Voltage (V)	Flange
50-15-280	-2 to +110	280	DN50	1000W	220	DN 50 to G2"

COSMO XXL

50-18-280

Max. Flow Rate	Max. Head
32 m³/h	18 m

Performance Curve

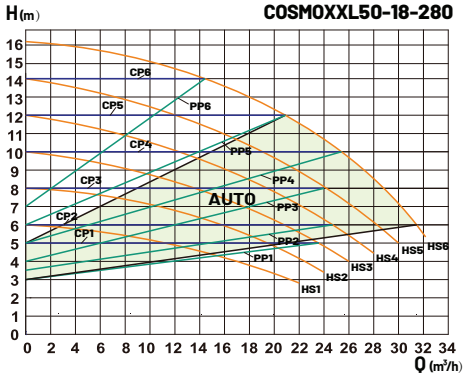

EEI ≤ 0.21

iPWM ErP READY CE RoHS Compliant

Dimensions

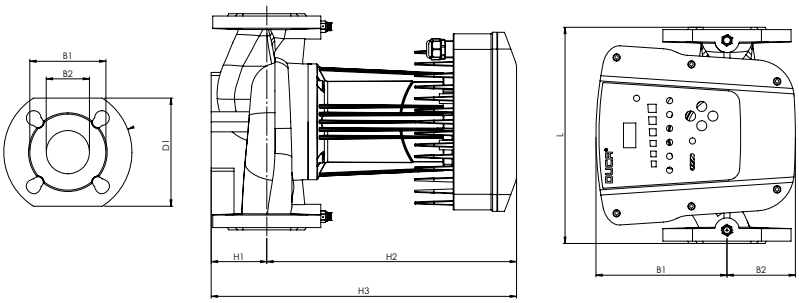

B1	95 mm	**H1**	72 mm	**L**	280 mm
B2	50 mm	**H2**	323,5 mm	**B1**	170 mm
D1	140 mm	**H3**	395,5 mm	**B2**	88,5 mm

Model Information

Model	Min/Max Temp (°C)	L (mm)	DN	P1 Max	Voltage (V)	Flange
50-18-280	-2 to +110	280	DN50	1000W	220	DN50 to G2"

COSMO XXL

65-15-340

Max. Flow Rate	Max. Head
48 m³/h	15 m

Performance Curve

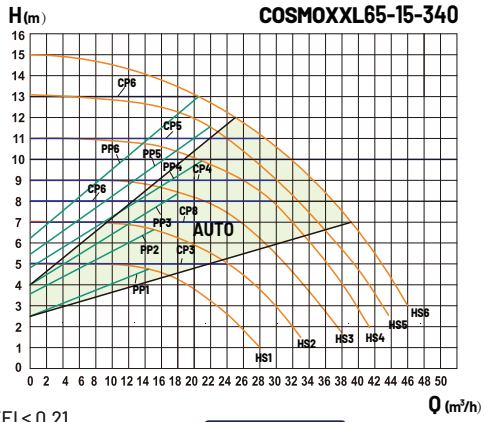

EEI ≤ 0.21

iPWM ErP READY CE RoHS Compliant

Dimensions

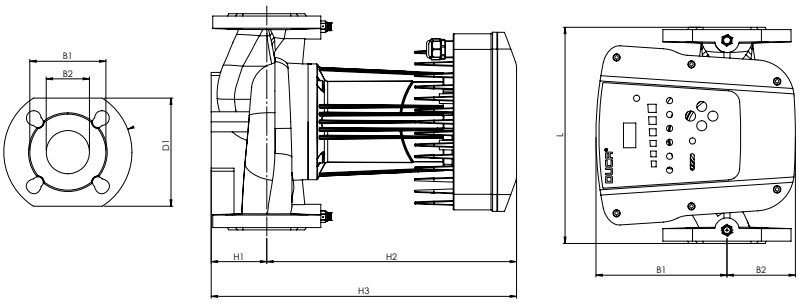

B1	156 mm	**H1**	80 mm	**L**	340 mm
B2	65 mm	**H2**	330 mm	**B1**	170 mm
D1	140 mm	**H3**	410 mm	**B2**	92 mm

Model Information

Model	Min/Max Temp (°C)	L (mm)	DN	P1 Max	Voltage (V)	Flange
50-18-280	-2 to +110	340	DN65	1300W	220	DN65 to G2½"

DUCA®

*3be Series

TECHNICAL DATA SHEET

3BE SERIES

Application

For domestic hot water system such as mix water underfloor heating system, air energy hot water circulation system, solar hot water circulation system and family hot, cold water pressurization circulation, etc.

Main features

- 3-speed or auto-adaptive operation (model dependent)
- Energy-efficient performance with low noise levels
- Leak-proof structure and robust hydraulic design
- Horizontal motor shaft installation
- Suitable for clean, non-corrosive liquids with water-like properties

Working condition

- Liquid temperature：2℃～110℃
- Ambient temperature：0～+40℃
- Protection level：IP44
- Rated voltage/frequency：230V/380V
- Insulation class：H
- Pumped liquid characteristics: clean liquid, free from solids and mineral oils, non-toxic, chemically neutral, close to the characteristics of water
- Installation: the motor shaft must be kept in horizontal direction

MODEL 3BE

40-10-220

Max. Flow Rate
16.5 m3/h

Max. Head
10m

Nameplate

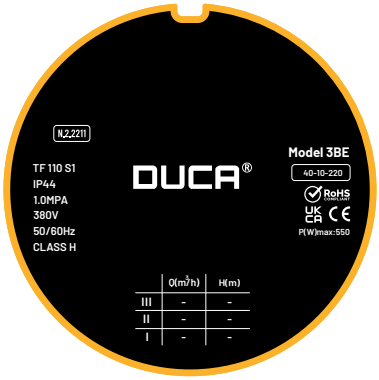

Performance Curve

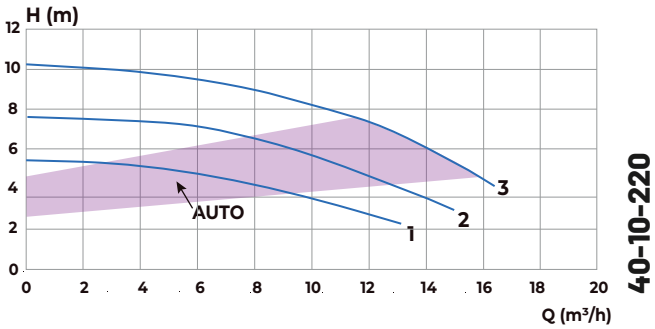

Dimensions

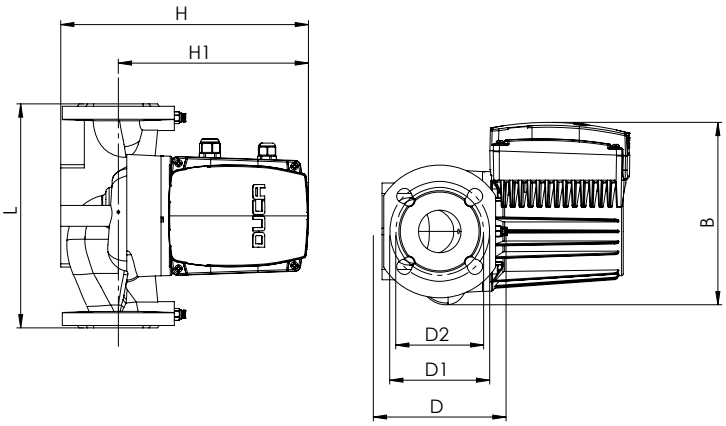

H	300 mm	**D**	150 mm
H1	235 mm	**D1**	110 mm
L	220 mm	**D2**	100 mm
B	217 mm		

Model Information

Model	Min/Max Temp (°C)	L (mm)	DN	P1 Max	Voltage (V)	Rated Current (A)	Flange
40-10-220	2 to +110	220	DN40	550	230	1,70-3.10	DN40 to1½"

MODEL 3BE

40-12-220

Max. Flow Rate
18 m³/h

Max. Head
12m

Nameplate

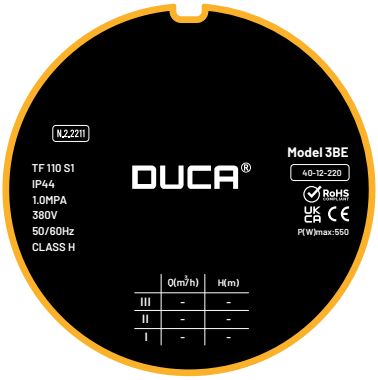

Performance Curve

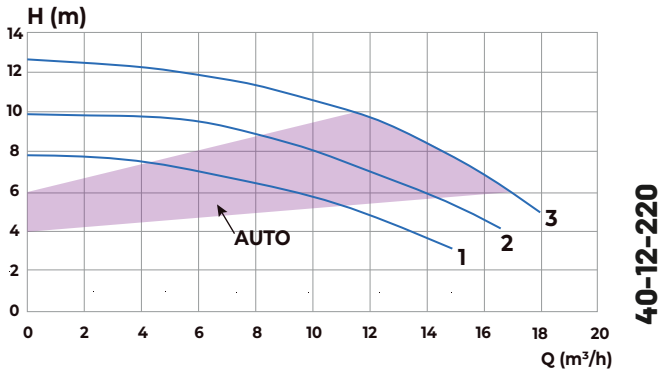

Dimensions

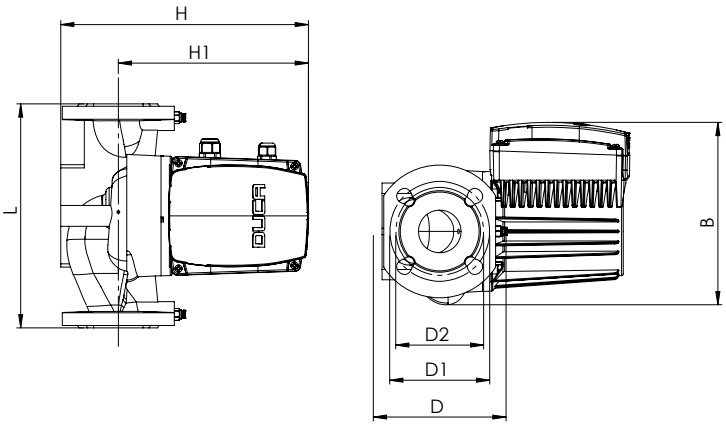

H	300 mm	**D**	150 mm
H1	235 mm	**D1**	110 mm
L	220 mm	**D2**	100 mm
B	217 mm		

Model Information

Model	Min/Max Temp (°C)	L (mm)	DN	P1 Max	Voltage (V)	Rated Current (A)	Flange
40-12-220	2 to +110	220	DN40	550	230	1,70-4,10	DN40 to1½"

MODEL 3BE

40-15-220

Max. Flow Rate 19,5 **m³/h**

Max. Head 15m

Nameplate

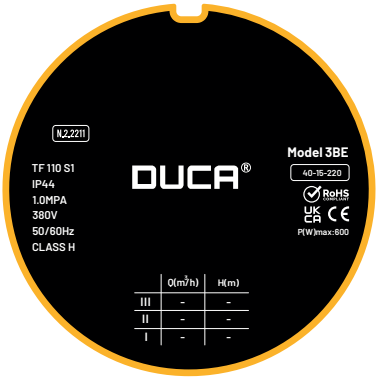

Performance Curve

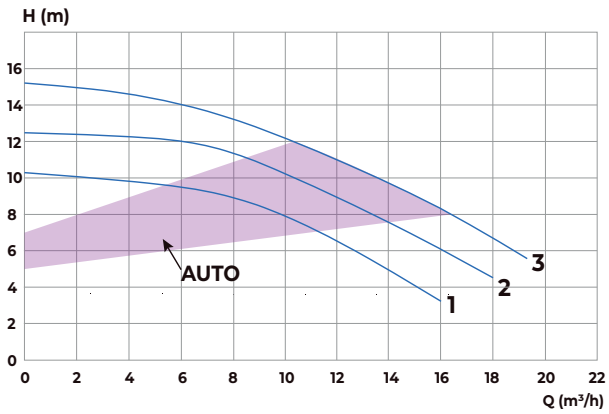

40-15-220

Dimensions

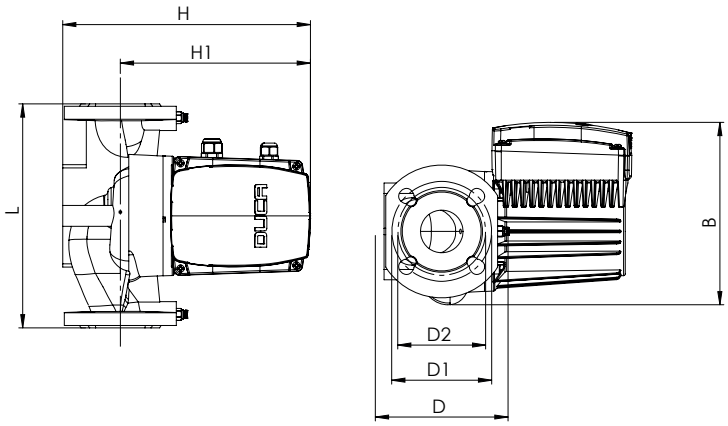

H	300 mm	**D**	150 mm
H1	235 mm	**D1**	110 mm
L	220 mm	**D2**	100 mm
B	217 mm		

Model Information

Model	Min/Max Temp (°C)	L (mm)	DN	P1 Max	Voltage (V)	Rated Current (A)	Flange
40-15-220	2 to +110	220	DN40	600	230	3,50-4,80	DN40 to1½"

MODEL 3BE

40-18-220

Max. Flow Rate 22 m³/h

Max. Head 18m

Nameplate

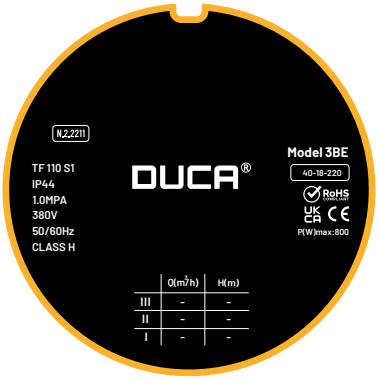

Performance Curve

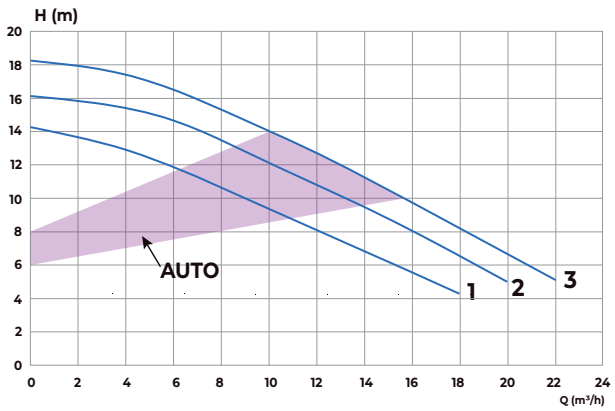

40-18-220

Dimensions

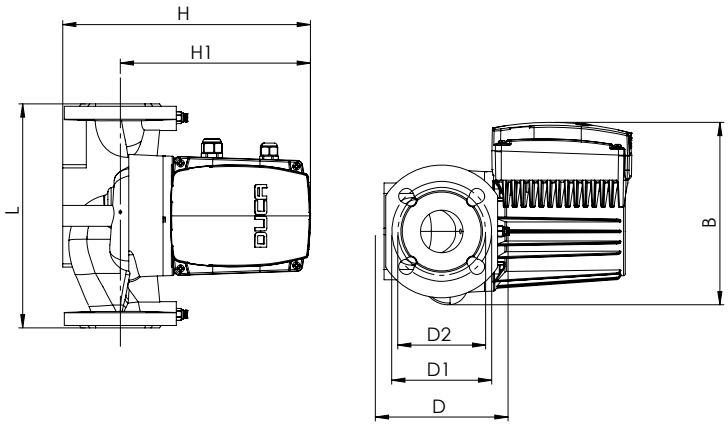

H	300 mm	**D**	150 mm
H1	235 mm	**D1**	110 mm
L	220 mm	**D2**	100 mm
B	217 mm		

Model Information

Model	Min/Max Temp (°C)	L (mm)	DN	P1 Max	Voltage (V)	Rated Current (A)	Flange
40-18-220	2 to +110	220	DN40	800	230	3,80-5,80	DN40 to1½"

MODEL 3BE

50-12-280

Max. Flow Rate
28 m³/h

Max. Head
12m

Nameplate

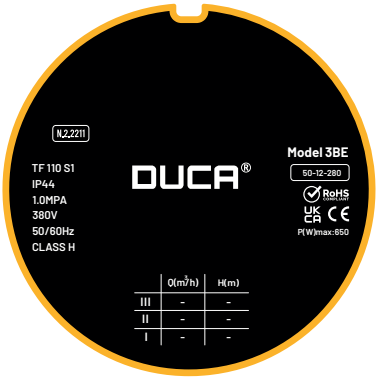

Performance Curve

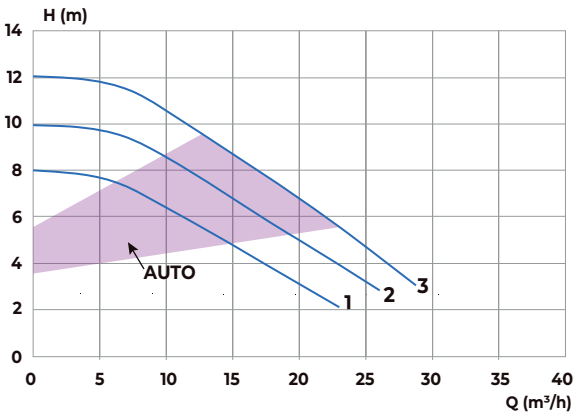

Dimensions

50-12-280

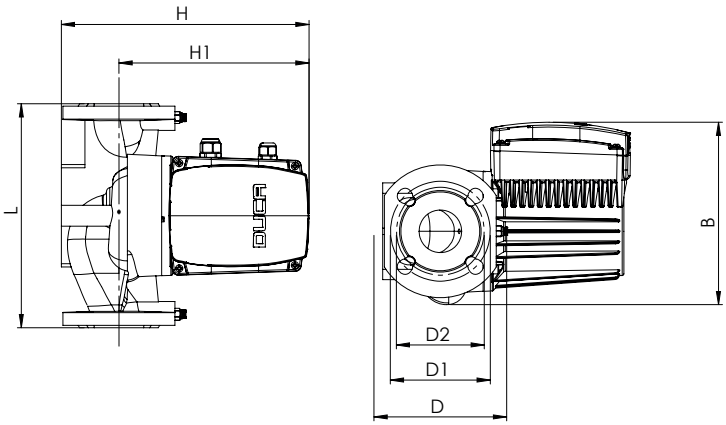

H	309 mm	**D**	165 mm
H1	237 mm	**D1**	125 mm
L	280 mm	**D2**	110 mm
B	232 mm		

Model Information

Model	Min/Max Temp (°C)	L (mm)	DN	P1 Max	Voltage (V)	Rated Current (A)	Flange
50-12-280	2 to +110	280	DN50	650	230	2,80-4,80	DN50 to 2”

MODEL 3BE

65-12-340

Max. Flow Rate 38 m³/h

Max. Head 12m

Nameplate

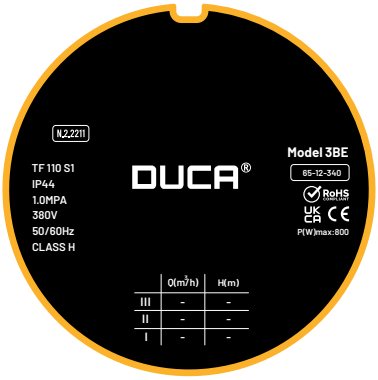

Performance Curve

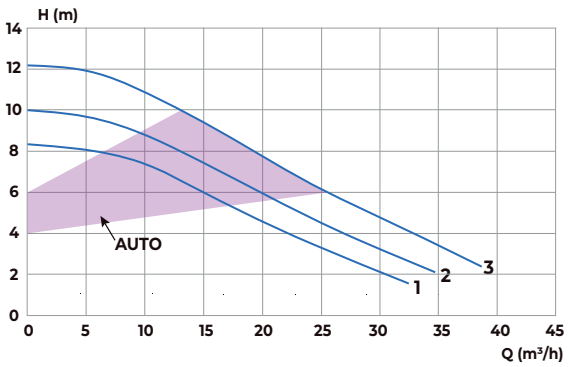

Dimensions

65-12-340

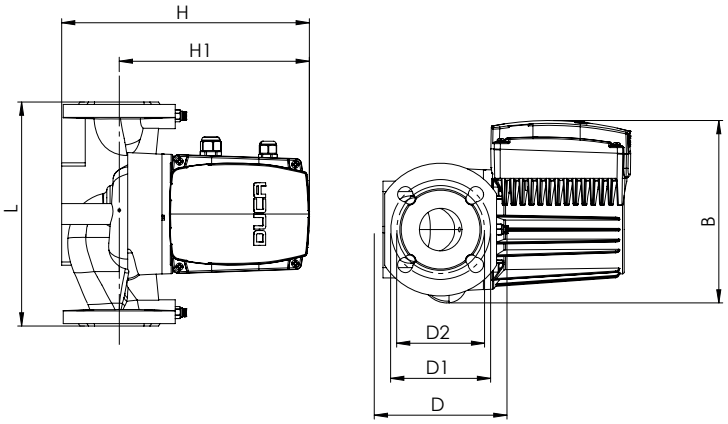

H	324 mm	**D**	185 mm
H1	224 mm	**D1**	145 mm
L	340 mm	**D2**	130 mm
B	244 mm		

Model Information

Model	Min/Max Temp (°C)	L (mm)	DN	P1 Max	Voltage (V)	Rated Current (A)	Flange
65-12-340	2 to +110	340	DN65	800	230	3,80-5,80	DN65to 2½"

MODEL 3BE

40-12-220

Max. Flow Rate
18 m³/h

Max. Head
12m

Nameplate

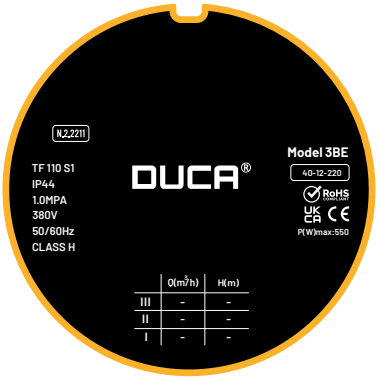

Performance Curve

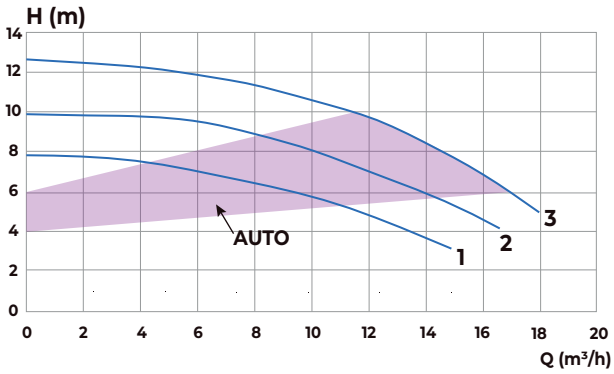

Dimensions

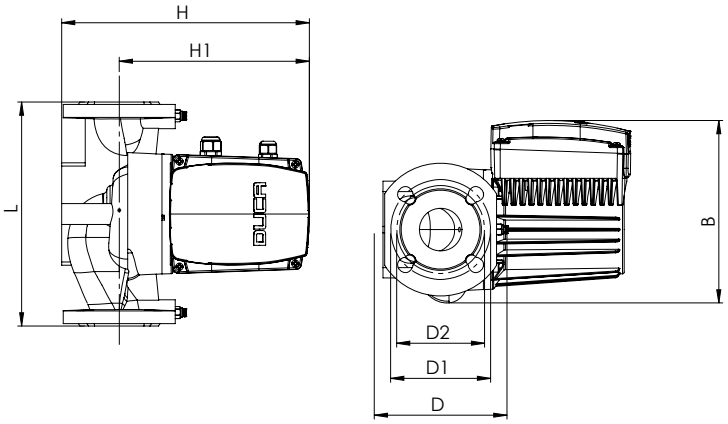

H	300 mm	**D**	150 mm
H1	235 mm	**D1**	110 mm
L	220 mm	**D2**	100 mm
B	217 mm		

Model Information

Model	Min/Max Temp (°C)	L (mm)	DN	P1 Max	Voltage (V)	Rated Current (A)	Flange
40-12-220	2 to +110	340	DN40	550	380	0,8-1,40	DN40to 1½”

MODEL 3BE

40-18-220

Max. Flow Rate 21 m³/h

Max. Head 18m

Nameplate

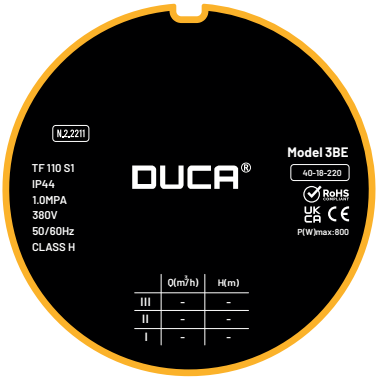

Performance Curve

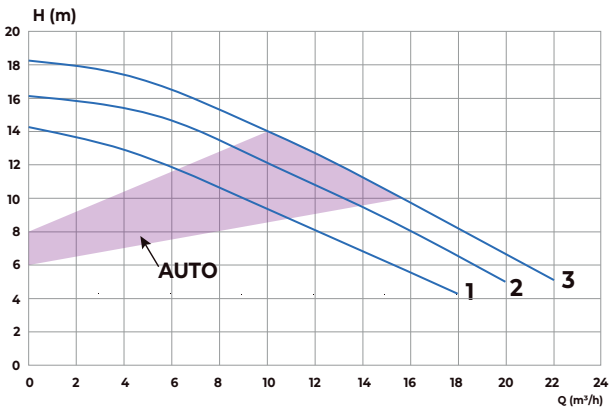

40-18-220

Dimensions

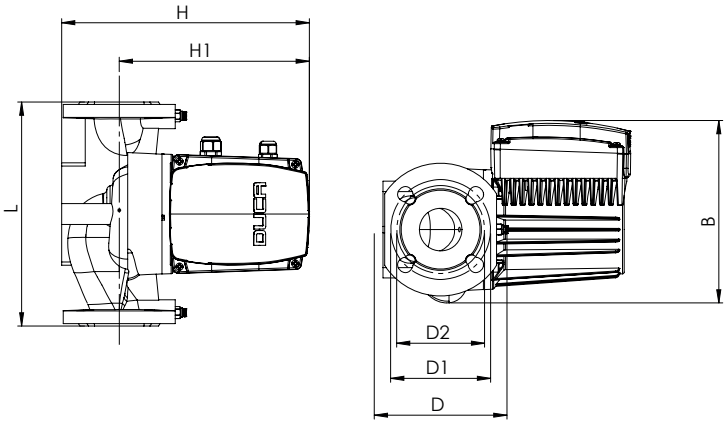

H	300 mm	**D**	150 mm
H1	235 mm	**D1**	110 mm
L	220 mm	**D2**	100 mm
B	217 mm		

Model Information

Model	Min/Max Temp (°C)	L (mm)	DN	P1 Max	Voltage (V)	Rated Current (A)	Flange
40-18-220	2 to +110	340	DN40	800	380	1,30-2,00	DN40to 1½"

MODEL 3BE

50-12-280

Max. Flow Rate
28 m³/h

Max. Head
12m

Nameplate

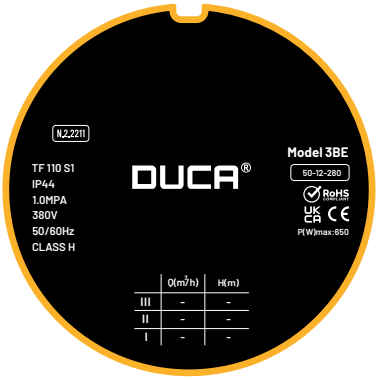

Performance Curve

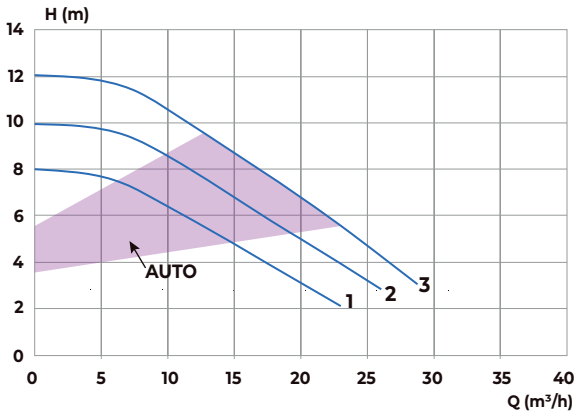

Dimensions

50-12-280

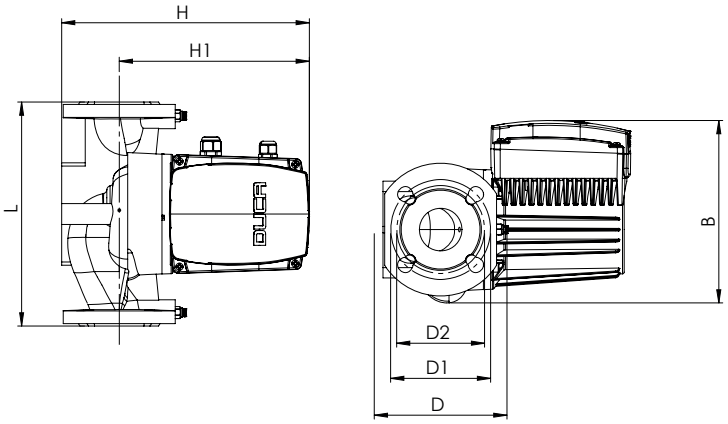

H	309 mm	**D**	165 mm
H1	237 mm	**D1**	125 mm
L	280 mm	**D2**	110 mm
B	232 mm		

Model Information

Model	Min/Max Temp (°C)	L (mm)	DN	P1 Max	Voltage (V)	Rated Current (A)	Flange
50-12-280	2 to +110	340	DN50	650	380	1,00-1,60	DN50 to 2”

MODEL 3BE

50-18-280

Max. Flow Rate
36 m³/h

Max. Head
18m

Nameplate

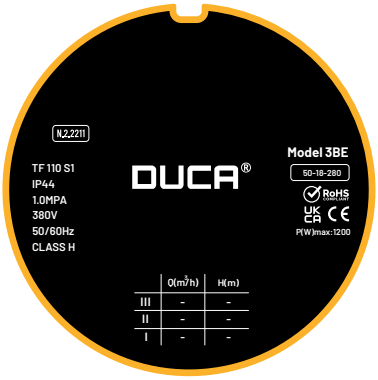

Performance Curve

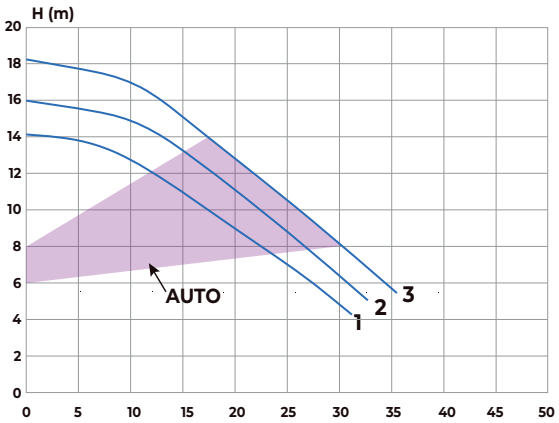

Dimensions

50-18-280

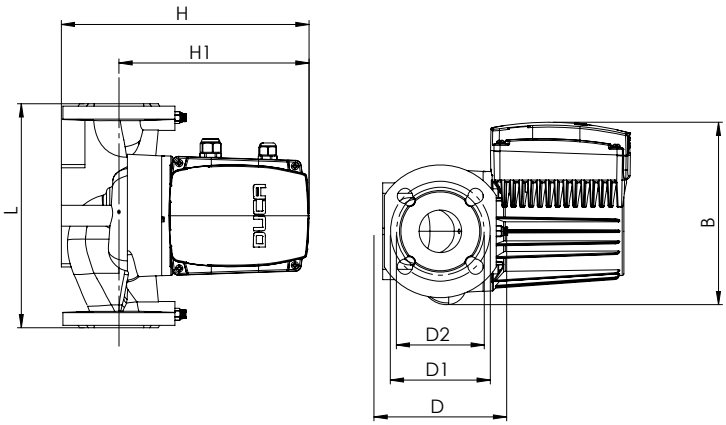

H	309 mm	**D**	165 mm
H1	237 mm	**D1**	125 mm
L	280 mm	**D2**	110 mm
B	232 mm		

Model Information

Model	Min/Max Temp (°C)	L (mm)	DN	P1 Max	Voltage (V)	Rated Current (A)	Flange
50-18-220	2 to +110	280	DN50	1200	380	1,80-2,80	DN50 to 2”

MODEL 3BE

65-12-340

Max. Flow Rate
38 m³/h

Max. Head
12m

Nameplate

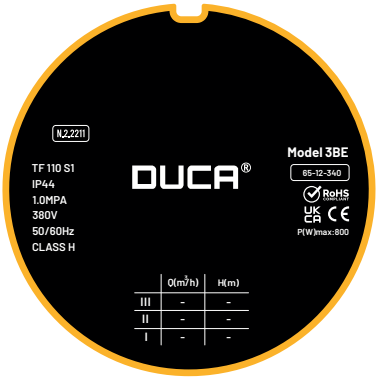

Performance Curve

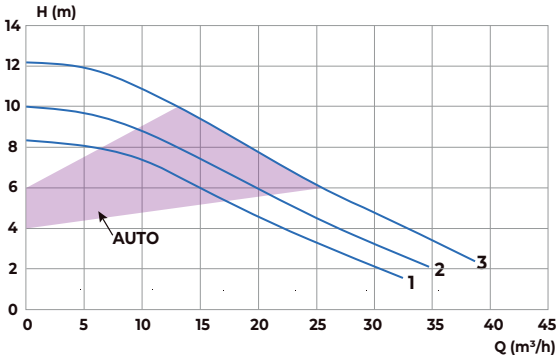

Dimensions

65-12-340

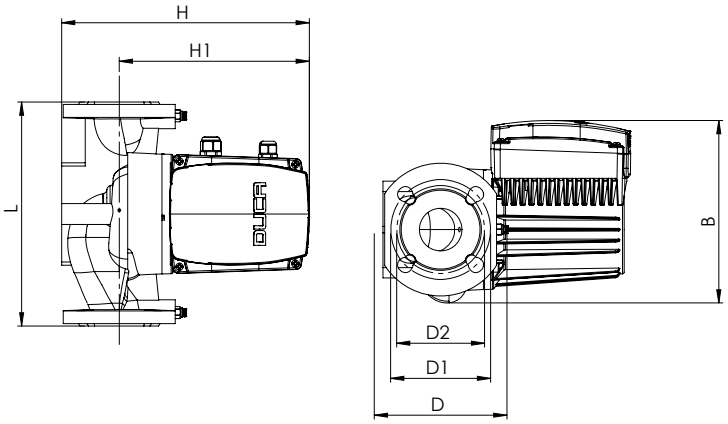

H	324 mm	**D**	185 mm
H1	224 mm	**D1**	145 mm
L	340 mm	**D2**	130 mm
B	244 mm		

Model Information

Model	Min/Max Temp (°C)	L (mm)	DN	P1 Max	Voltage (V)	Rated Current (A)	Flange
65-12-340	2 to +110	340	DN65	800	380	1,70-2,60	DN65to 2½"

MODEL 3BE

65-18-340

Max. Flow Rate
48 m³/h

Max. Head
18m

Nameplate

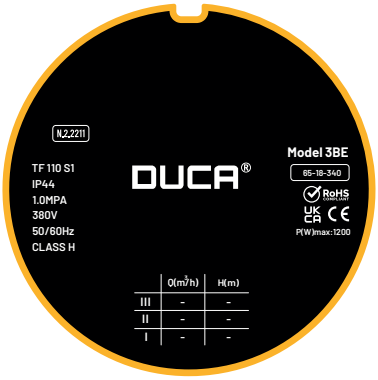

Performance Curve

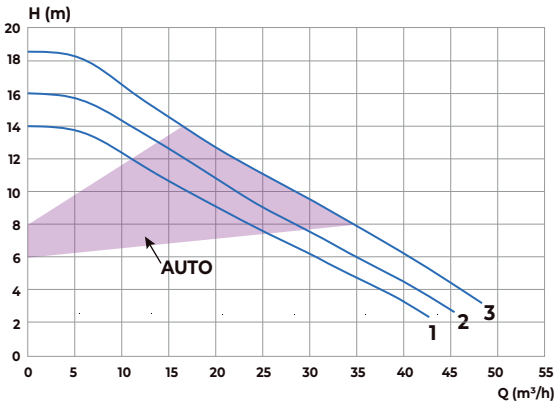

Dimensions

65-18-340

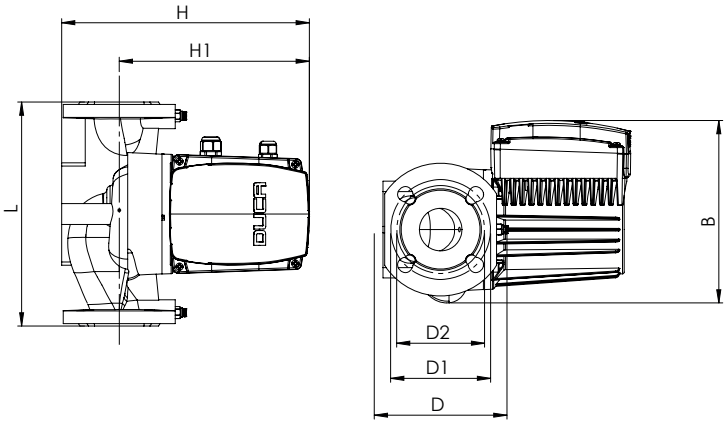

H	324 mm	**D**	185 mm
H1	224 mm	**D1**	145 mm
L	340 mam	**D2**	130 mm
B	244 mm		

Model Information

Model	Min/Max Temp (°C)	L (mm)	DN	P1 Max	Voltage (V)	Rated Current (A)	Flange
65-18-340	2 to +110	340	DN65	1200	380	1,81-2,62	DN65to 2½"

MODEL 3BE

80-15-360

Max. Flow Rate
52 m³/h

Max. Head
15m

Nameplate

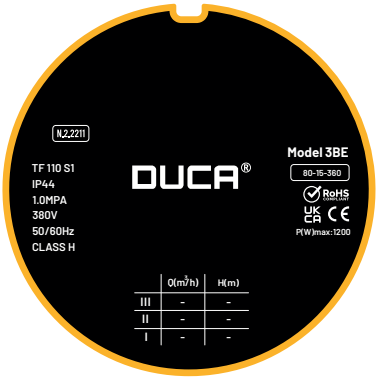

Performance Curve

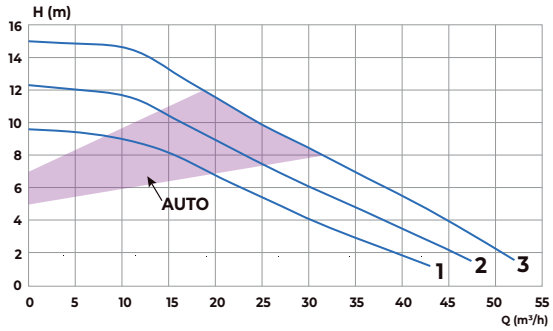

80-15-360

Dimensions

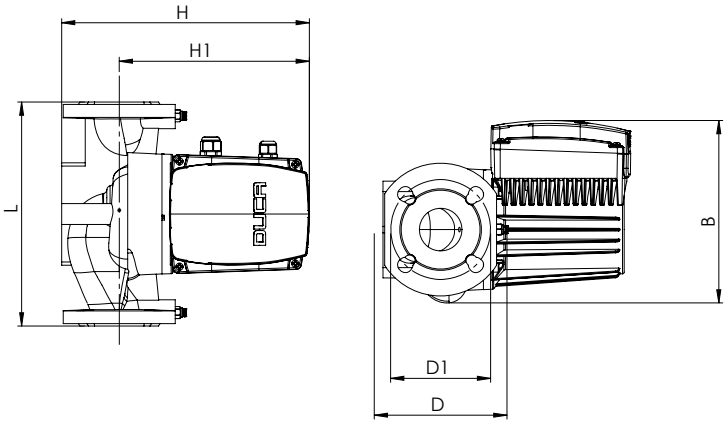

H 343 mm
H1 241 mm
L 360 mam
B 244 mm

D 200 mm
D1 160 mm

Model Information

Model	Min/Max Temp (°C)	L (mm)	DN	P1 Max	Voltage (V)	Rated Current (A)	Flange
80-15-360	2 to +110	340	DN80	1200	380	1,81-2,74	DN80 to 3"

Purposefully Engineered.
Reliably Delivered.

At DUCA, every pump begins with a purpose: to perform with precision, to endure over time, and to adapt to the real needs of daily life.

From design to delivery, our process is guided by expertise, quality, and a deep understanding of where and how our products operate. Each product is rigorously tested to ensure long-term reliability, energy efficiency, and consistent performance under varying conditions.

We don’t just manufacture components — we build trust, one pump at a time.

DUCA®

*Force Master

FORCE MASTER

Application

Suitable for domestic hot water systems including mixed-water underfloor heating, air-energy hot water circulation, solar hot water circulation, and house-hold hot/cold water pressurization circulation.

Main features

- Permanent magnet synchronous motor, copper enameled wire, NdFeB magnet.
- Compact structure, quiet operation (<58 dB).
- Energy-efficient variable frequency control.
- Easy installation and reliable operation.
- Low standby power consumption (≤10W).
- Built-in check valve.

Working condition

- Max ambient temperature: +40°C
- Voltage: AC 230V / 50Hz
- Protection class: IP44
- Insulation grade: F
- Maximum operating pressure: 10 bar
- Liquid temperature: 0°C – 50°C
- PH range of liquid: 6.5 – 8.5
- Max solid particle content: ≤0.1%, particle size ≤0.1 mm

FORCE MASTER

Inlet and Outlet Diameter: DN 25

Max. Flow Rate 5,5 m3/h

Max. Pump Head 45 m

Nameplate

DUCA® FORCE MASTER			
Power Frequency	220V / 50HZ	Medium Temperature	0°C ~ 50°C
MAX Compression	10 Bar	Insulation Class	F
MAX Head	45m	Rated Head	30m
MAX Traffic	5.5 m^3/h	Rated Flow	3 m^3/h
Input Power	600W	Protection Level	IP 44
Rated Current	2.9A	Working System	S1
TF	50°C	Motor Steering	Pump port Counterclockwise

Performance Curve

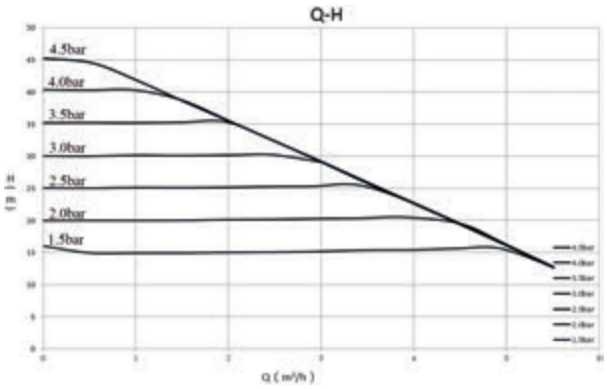

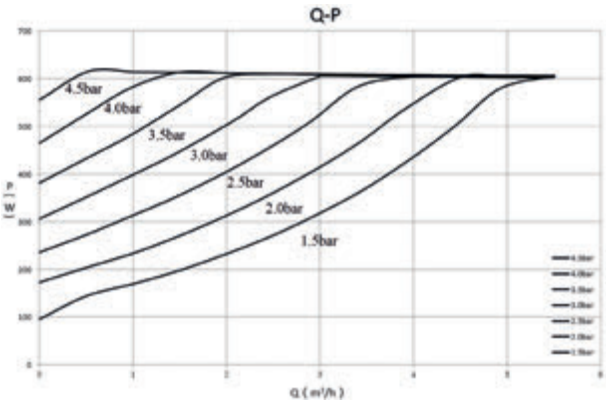

Dimension

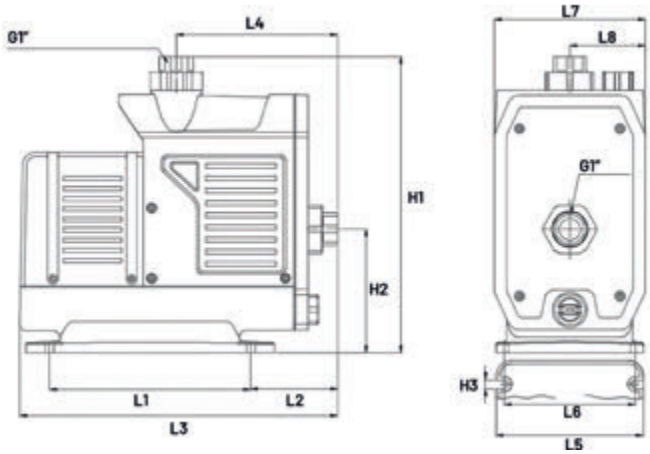

L1 230 mm
L2 99 mm
L3 365 mm
L4 184.5 mm
L5 168 mm
L6 150 mm
L7 174 mm
L8 87 mm
H1 339 mm
H2 141 mm
H3 10 mm
G 1"

Innovation Meets Precision

Engineering Excellence at Every Stage

At Duca Pump, our skilled engineers meticulously design each product, ensuring superior performance and outstanding energy efficiency. Through advanced simulations and precise technical analysis, we deliver pumping solutions that seamlessly blend innovation with reliability—transforming every drop of water into sustainable comfort.

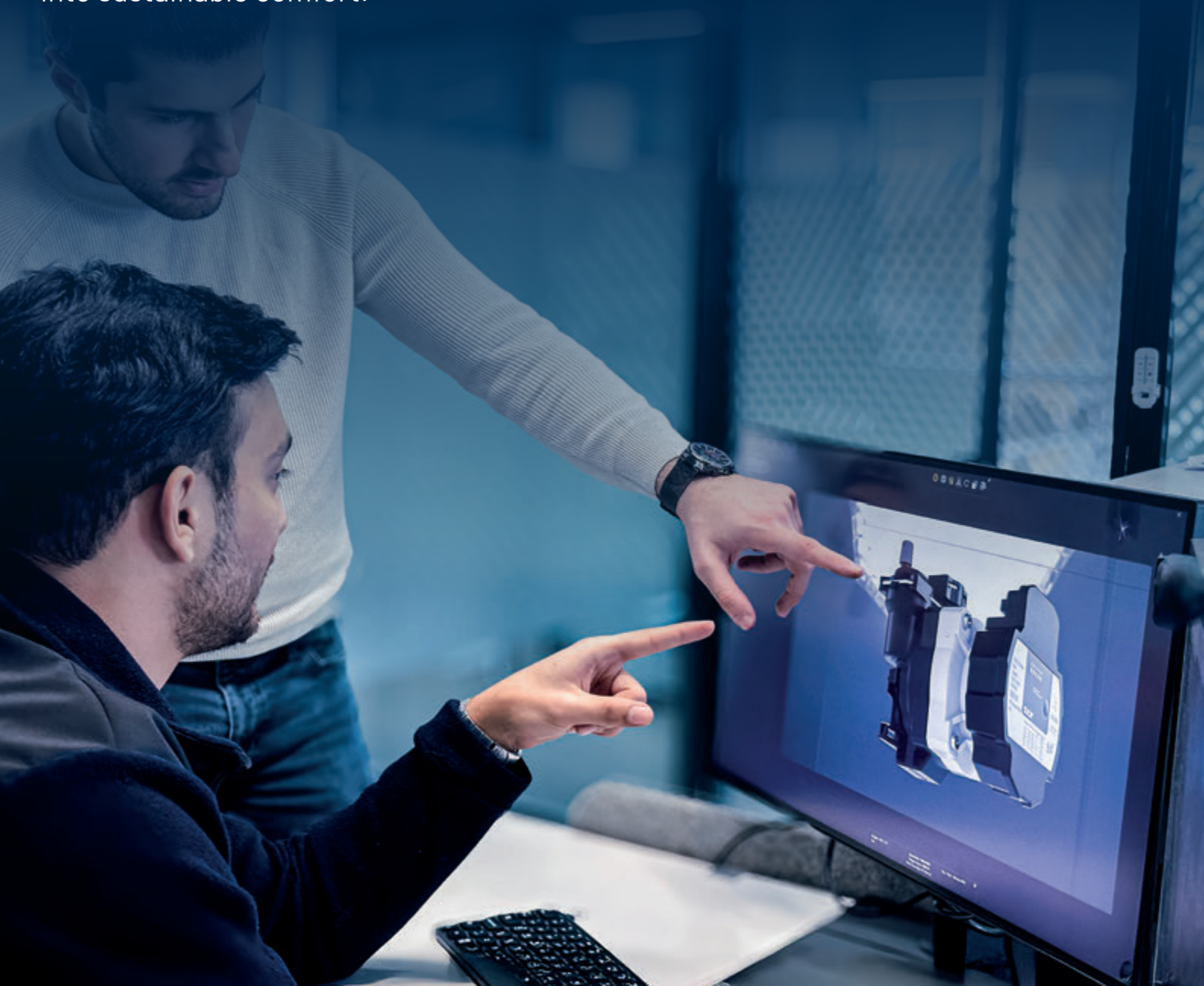

DUCA®

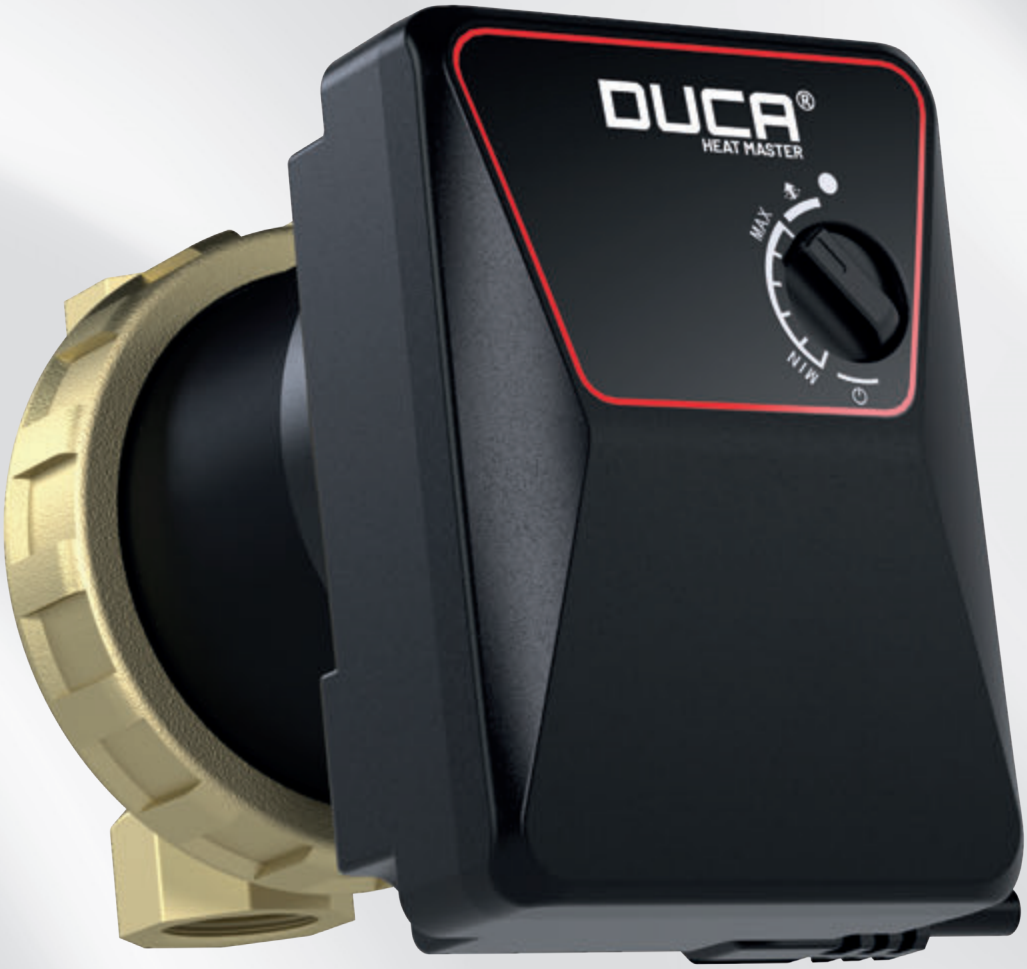

*Heat Master

TECHNICAL DATA SHEET

HEAT MASTER

Application

Heat Masterseries intelligent variable frequency circulating pumps (hereinafter referred to as electric pumps) comply with Q/SG 604 standards. The stator of the motor is completely shielded, and the rotating parts are immersed in clean water, which plays a role of cooling and lubrication during operation. The shield sleeve of the electric pump adopts a thin-walled structure, which completely shields and isolates the inner iron core of the motor from the water, cancels the traditional mechanical seal structure type, and solves the sealing water leakage problem of the conventional water pump. The rotating parts adopt ceramic bearings and ceramic shafts, which are wear-resistant and lubricated with clean water, which can cool the motor and reduce noise. Full lift work is not loaded. As long as it is used correctly, it is generally free from maintenance.

Main features

- Low noise and no leakage
- Brass pump body, corrosion resistance and durability
- Compact structure and easy installation
- Knob control, easy to operate
- Low power and energy consumption

Working condition

- Liquid temperature：2°C～75°C
- Ambient temperature：-20～+40°C
- Max system pressure：10bar
- Protection level：IPX4
- Rated voltage/frequency：230V(-10%～+6%), 50/60Hz
- Domestic water (non-drinking water), the pH value of the medium is between 6.5 and 8.5,
- the volume content of solid particles is not more than 0.1% of unit volume, and the particle size is not more than 0.2mm

HEAT MASTER

Max. Flow Rate
0,5 m³/h

Max. Head
1,7m

Performance Curve

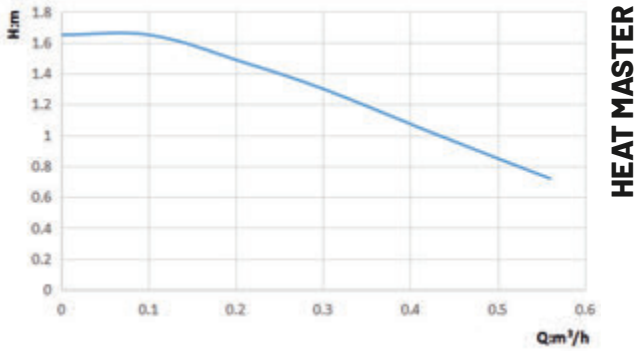

Dimensions

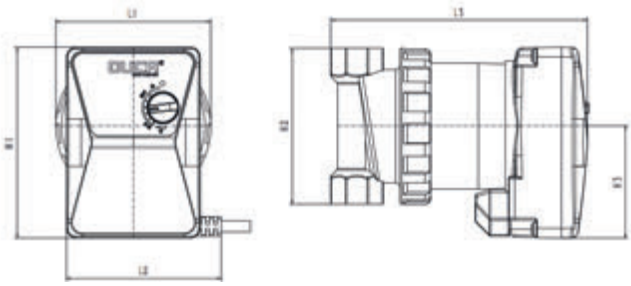

H1 98 mm
H2 80 mm
H3 57,5 mm

L1 80 mm
L2 123 mm
L3 123 mm

DUCA®

DUCA®

*Heat Master L

TECHNICAL DATA SHEET

HEAT MASTER L

Application

Domestic hot water often requires draining cold water from pipes before hot water arrives, causing delays and resource waste. Our Intelligent Return Pump addresses this issue by providing immediate hot water upon tap activation, offering comfort and efficiency.

The system supports multiple operation modes including continuous intelligent temperature control, energy-saving mode, touch activation, remote control, and automatic water flow activation, enabling "zero cold water" convenience.

Suitable for gas, electric, solar, air-source water heaters, and wall-mounted furnaces, the pump effectively serves households with pipe lengths between 30m-150m and a minimum water flow of 6L/min.

For installations without dedicated return pipes, the pump connects between hot and cold water lines near the endpoint. For systems with return pipes, it connects between the hot water line and return pipe, typically near the water tank or pipeline endpoint.

Main features

- Immediate hot water supply ("zero cold water").
- Intelligent, energy-efficient constant temperature control.
- Versatile start methods (touch, remote control, water flow activation).
- Compatible with gas, electric, solar, air-energy heaters, and wall-mounted furnaces.
- Supports pipeline lengths 30–150 m with min. flow of 6L/min.
- Flexible installation (with or without return pipe).

Working condition

- Liquid temperature：2°C～70°C
- Ambient temperature：-20°C～+40°C
- Max system pressure：10bar
- Protection level：IP21
- Rated voltage/frequency：230V(-10%～+6%), 50/60Hz
- Domestic water (non-drinking water), the pH value of the medium is between 6.5 and 8.5,
- the volume content of solid particles is not more than 0.1% of unit volume, and the particle size is not more than 0.2mm

HEAT MASTER L

Max. Flow Rate
1,6 m³/h

Max. Head
12m

Performance Curve

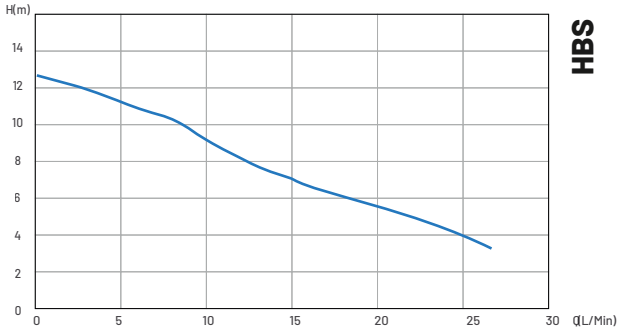

Dimensions

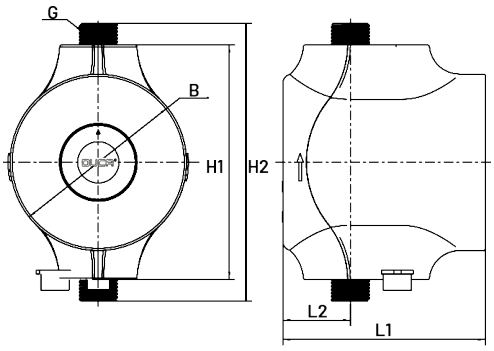

H1 125 mm
H2 148 mm
B 94 mm
L1 108 mm
L2 36 mm
G 1½

DUCA®

DUCA®

DUCA®
XR 25-8-180
IP44
220~
240V
60Hz
Class H
TF 110C°
P (W) | I (A)
90 | 0.50
150 | 0.75
180 | 0.85
P max 180W

*Xr

TECHNICAL DATA SHEET

XR

Application

For domestic hot water system such as mix water underfloor heating system, air energy hot water circulation system, solar hot water circulation system and family hot, cold water pressurization circulation, etc.

Main features

- 3-speed adjustment
- Low noise
- No leakage

Working condition

- Liquid temperature：2℃～110℃
- Ambient temperature：0～+40℃
- Max system pressure：10 bar
- Protection level：IP44
- Rated voltage/frequency：220V～240V/50Hz
- Insulation class：H
- Pumped liquid characteristics: clean liquid, free from solids and mineral oils, non-toxic, chemically neutral, close to the characteristics of water
- Installation: the motor shaft must be kept in horizontal direction

XR

XX - 4

Max. Flow Rate
3 m³/h

Max. Head
4m

Nameplate

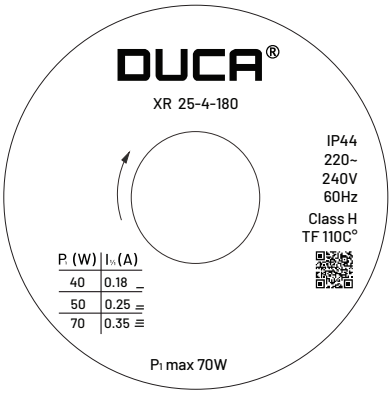

Performance Curve

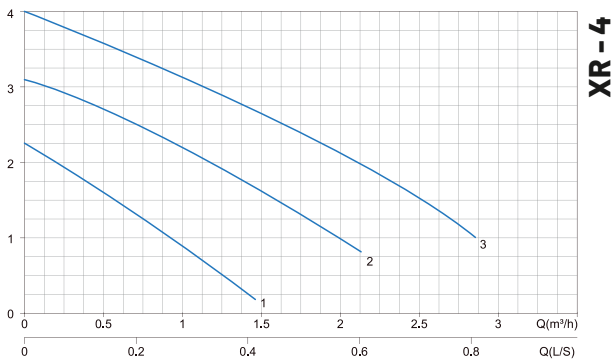

Dimensions

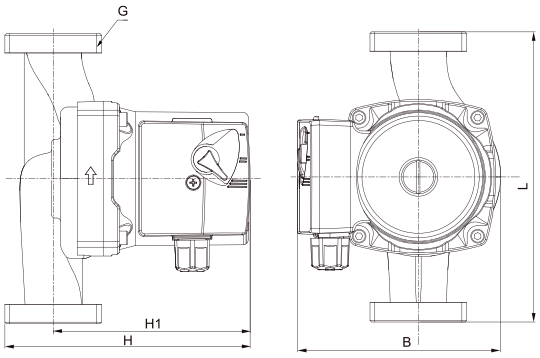

H 133 mm
H1 103 mm
L 130/180 mm
B 123 mm

Different models

Model	Min/Max Temp (°C)	L (mm)	DN	P1 Max	Voltage (V)	Rated Current (A)	Union
25-4-130	2 to +110	130	25mm G1½	70	1x230	0,18-0,35	G1½ to G1
25-4-180	2 to +110	180	25mm G1½	70	1x230	0,18-0,35	G1½ to G1
32-4-180	2 to +110	180	32mm G2	70	1x230	0,18-0,35	G2 to G1¼

XR

XX - 6

Max. Flow 3,2 m³/h

Max. Head 6m

Nameplate

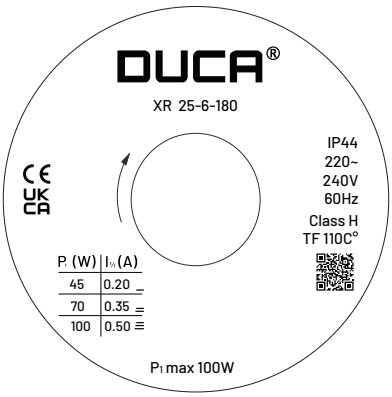

Performance Curve

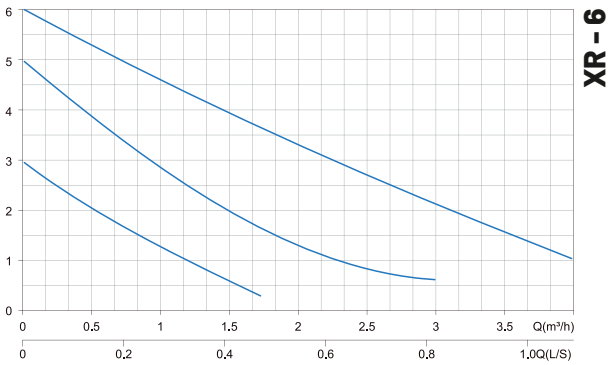

Dimensions

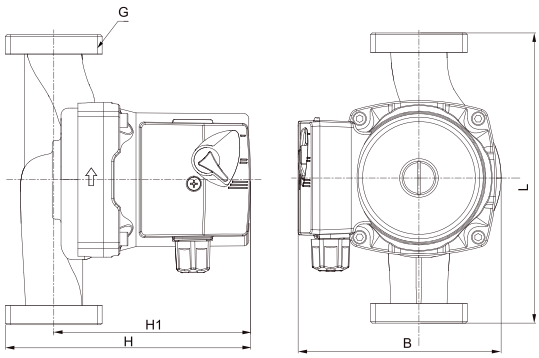

H 133 mm

H1 103 mm

L 130/180 mm

B 123 mm

Different models

Model	Min/Max Temp (°C)	L (mm)	DN	P1 Max	Voltage (V)	Rated Current (A)	Union
25-6-130	2 to +110	130	25mm G1½	100	1x230	0,20-0,50	G1½ to G1
25-6-180	2 to +110	180	25mm G1½	100	1x230	0,20-0,50	G1½ to G1
32-6-180	2 to +110	180	32mm G2	100	1x230	0,20-0,50	G2 to G1¼

XR

XX - 8

Max. Flow
3,5 m³/h

Max. Head
8m

Nameplate

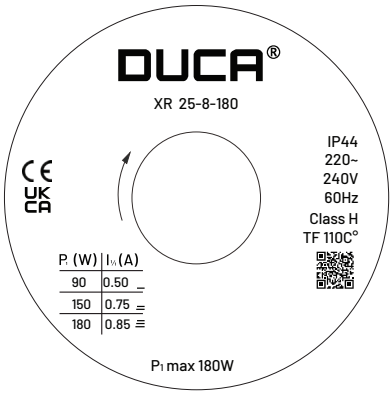

Performance Curve

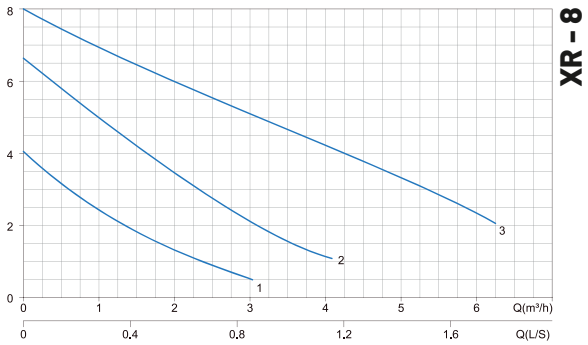

Dimensions

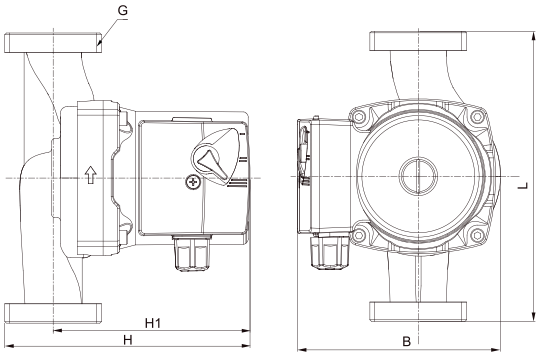

H 133 mm
H1 103 mm
L 130/180 mm
B 123 mm

Different models

Model	Min/Max Temp (°C)	L (mm)	DN	P1 Max	Voltage (V)	Rated Current (A)	Union
25-8-180	2 to +110	180	25mm G1½	180	1x230	0,50-0,85	G1½ to G1

Engineered For Excellence

Innovation, Quality, Reliability

Our dedicated Research & Development team meticulously tests and refines each pump to exceed global standards. By combining advanced engineering with innovative technology, Duca ensures reliable performance, energy efficiency, and maximum durability—bringing comfort, safety, and sustainability into every home we serve.

DUCA®

DUCA®
XR PRO 25-8-180
IP44
220-
240V
60Hz
Class H
TF 110C°
CE
UK
CA
P (W) I (A)
145 0.62
185 0.78
200 0.83
P1 max 200W

*Xr Pro

TECHNICAL DATA SHEET

XR PRO

Application

For domestic hot water system such as mix water underfloor heating system, air energy hot water circulation system, solar hot water circulation system and family hot, cold water pressurization circulation, etc.

Main features

- 3-speed adjustment
- Low noise
- No leakage

Working condition

- Liquid temperature：2℃～110℃
- Ambient temperature：0～+40℃
- Max system pressure：10 bar
- Protection level：IP44
- Rated voltage/frequency：220V～240V/50Hz
- Insulation class：H
- Pumped liquid characteristics: clean liquid, free from solids and mineral oils, non-toxic, chemically neutral, close to the characteristics of water
- Installation: the motor shaft must be kept in horizontal direction

XR PRO

XX - 6

Max. Flow Rate 4 m³/h

Max. Head 6m

Nameplate

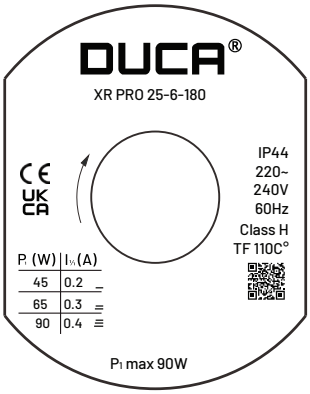

Performance Curve

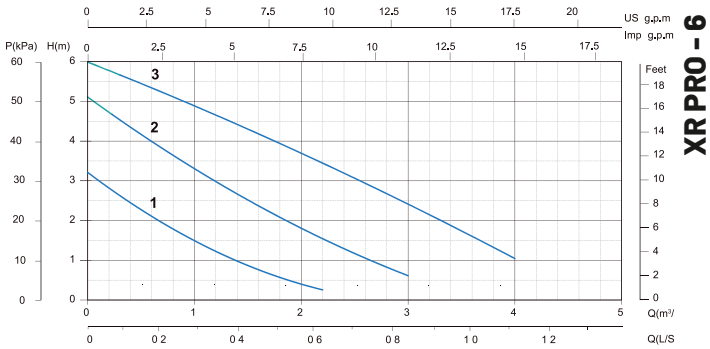

Dimensions

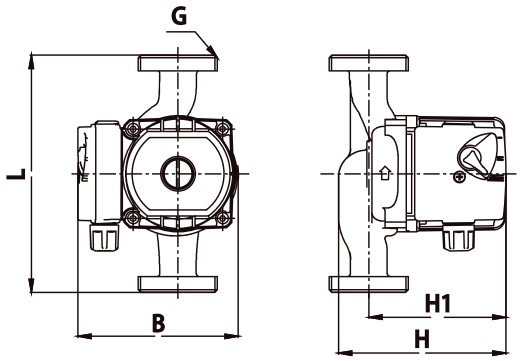

H 125 mm

H1 105 mm

L 130/180 mm

B 130 mm

Different models

Model	Min/Max Temp (°C)	L (mm)	DN	P1 Max	Voltage (V)	Rated Current (A)	Union
25-6-130	2 to +110	130	25mm G1½	90	1x230	0,20-0,40	G1½ to G1
25-6-180	2 to +110	180	25mm G1½	90	1x230	0,20-0,40	G1½ to G1

XR PRO

XX - 8

Max. Flow Rate 8 m³/h

Max. Head 8m

Nameplate

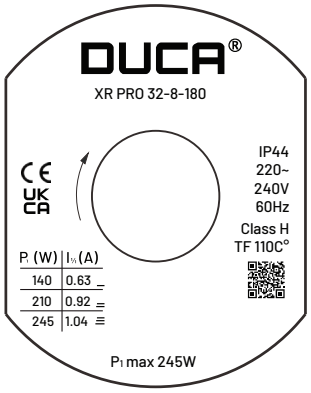

Performance Curve

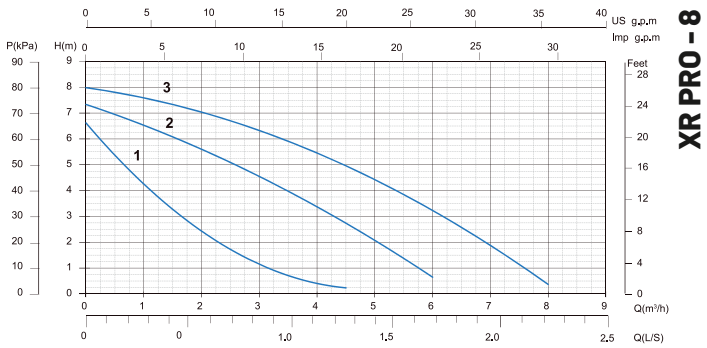

Dimensions

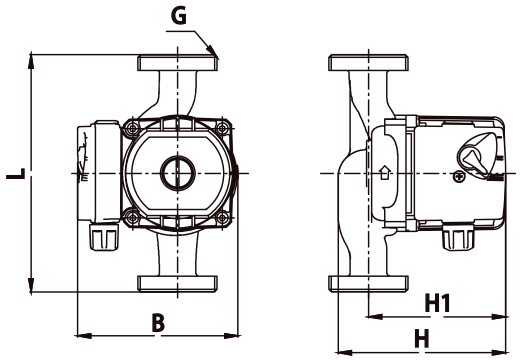

H 170 mm

H1 130 mm

L 180 mm

B 150 mm

Different models

Model	Min/Max Temp (°C)	L (mm)	DN	P1 Max	Voltage (V)	Rated Current (A)	Union
25-8-180	2 to +110	130	25mm G1½	200	1x230	0,20-0,40	G1½ to G1
32-8-180	2 to +110	180	32mm G2	245	1x230	0,20-0,40	G2 to G1¼

DUCA®

*Xr Pro Xl

TECHNICAL DATA SHEET

XR PRO XL

Application

For domestic hot water system such as mix water underfloor heating system, air energy hot water circulation system, solar hot water circulation system and family hot, cold water pressurization circulation, etc.

Main features

- 3-speed adjustment
- Low noise
- No leakage

Working condition

- Liquid temperature：2℃～110℃
- Ambient temperature：0～+40℃
- Max system pressure：10 bar
- Protection level：IP44
- Rated voltage/frequency：220V～240V/50Hz
- Insulation class：H
- Pumped liquid characteristics: clean liquid, free from solids and mineral oils, non-toxic, chemically neutral, close to the characteristics of water
- Installation: the motor shaft must be kept in horizontal direction

XR PRO XL

XX - 12

Max. Flow Rate
4 m³/h

Max. Head
6m

Nameplate

Performance Curve

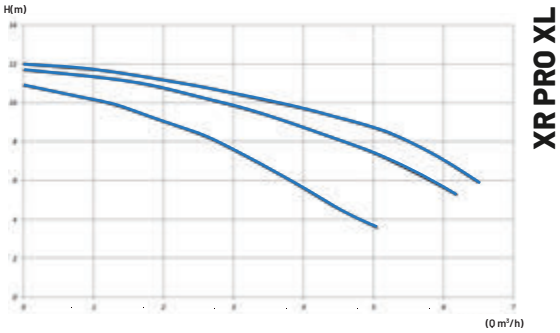

Dimensions

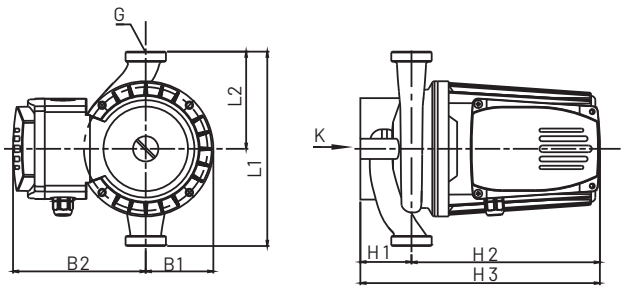

H1 125 mm
H2 105 mm
K 105 mm
G 105 mm

L1 130/180 mm
L2 130/180 mm
B1 130 mm
B2 130 mm

Different models

Model	Min/Max Temp (°C)	L (mm)	DN	P1 Max	Voltage (V)	Rated Current (A)	Union
25-12-180	2 to +110	180	25mm G1½	500	1x230	2,00-2,50	G1½ to G1
32-12-180	2 to +110	180	32mm G2	500	1x230	2,00-2,50	G2 to G1½

DUCA®

Compo-nents

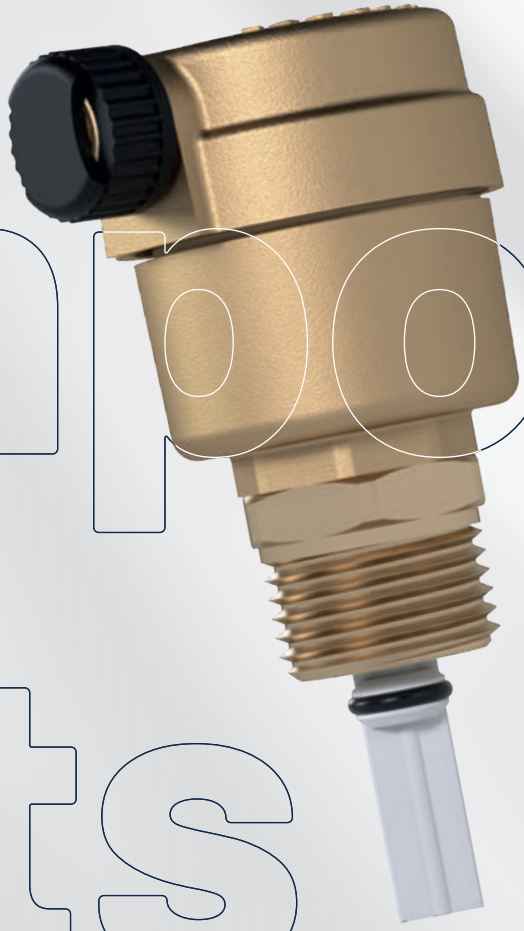

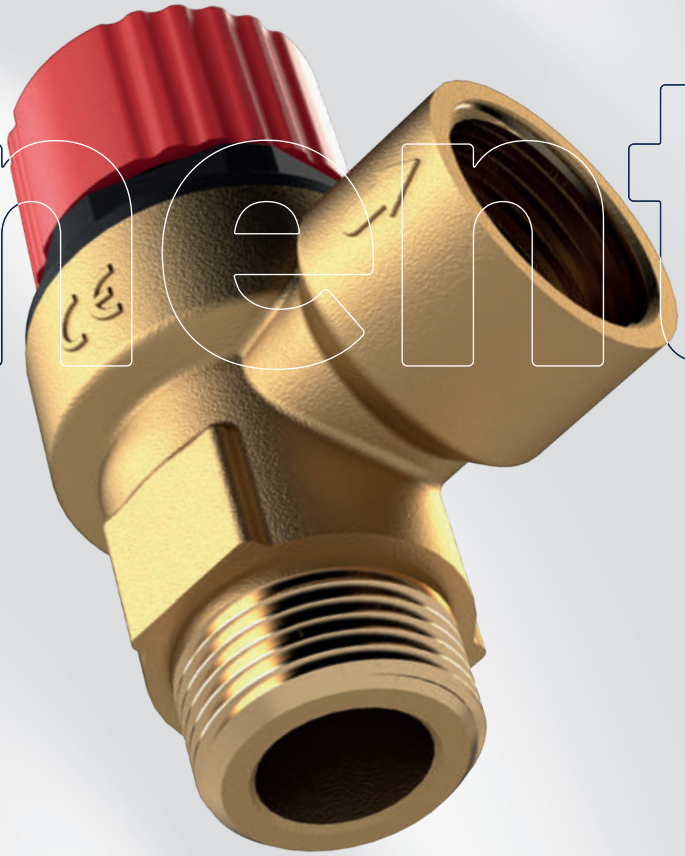

Automatic Air Purger

G1/4 + G1/2 Check Valve

FOR HEATING SYSTEMS

Product Description

The automatic air purger removes unwanted air bubbles from plumbing systems, ensuring efficient and safe operation. Its brass body provides durability, making it suitable for hot and cold water systems.

Standards

Certificates: TSE

Design: TS 7817

Thread Standard: EN ISO 228-1

Tests: TS EN 12266-1

No	Part Name	Material
1	Body	CuZn40Pb2 - CW617N - Forced Brass
2	Bonnet	CuZn40Pb2 - CW617N - Forced Brass
3	Safety Valve	Ebonite
4	Float	Ebonite
5	Check Valve	CuZn40Pb2 - CW617N - Forced Brass

MADE IN TURKİYE

Safety Valve

FOR HEATING SYSTEMS

Product Description

It is a safety equipment used to relieve excess pressure that occurs in heating, cooling, and plumbing systems, preventing damage to the system.

General Features

Discharge: G 1/2"

Connection: G 1/2"

Spring: Spring Steel

Terms of Use

Liquid Temperature: 110 °C
Maximum System Pressure: 10 Bar
Pressure Settings: 3/4/6 Bar

MADE IN
TURKİYE

/ ducapump

DUCA®
CONNECT

Great Place To Work.
Certified
JAN 2025-JAN 2026
TÜRKİYE